SECTION (1:25)

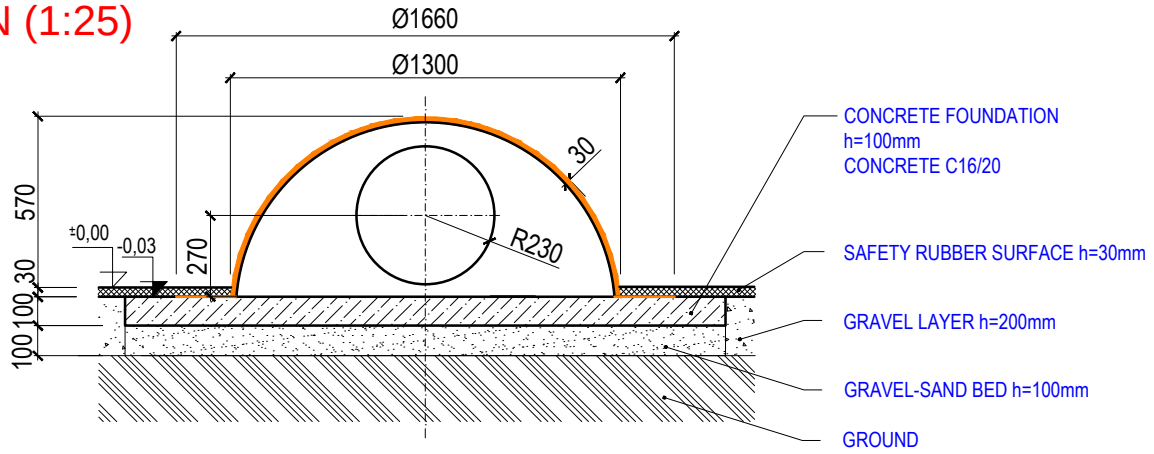

Tube can be either from PVC
or stainless steel as per customer's request

FOUNDATION GROUND PLAN (1:25)

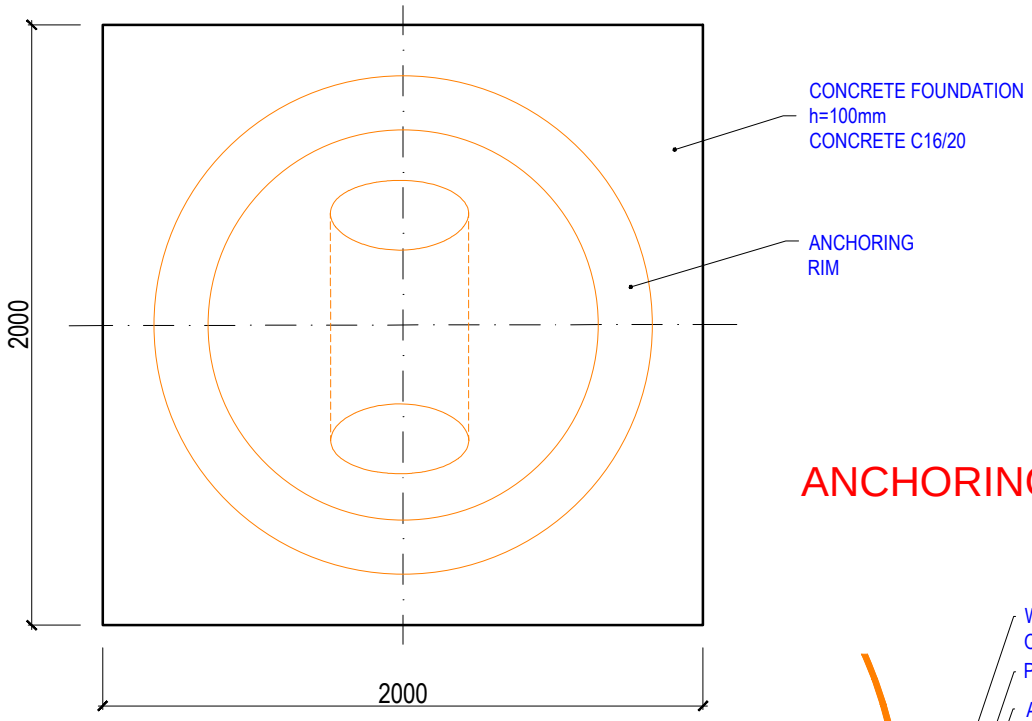

ANCHORING DETAIL (1:10)

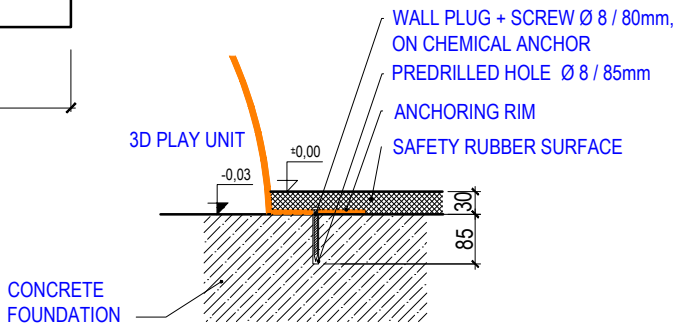

Author:		3D PROGRAM, s.r.o. Objízdná 1911 765 02 Otrokovice, Czech Republic Tel: +420 602 500 045 Email: info@3dprogram.eu	3D PROGRAM ®
MgA. Maxmilián Blšták			
TECHNICAL DRAWING		Certified according to	EN71 , EN1176
		Date of issue	22.2.2021
E10 - HILL L		M 1:25, 1:10	format 1xA4
Foundation and anchoring - ground plan and section		E09_EN.dwg	revision 0