RB1388

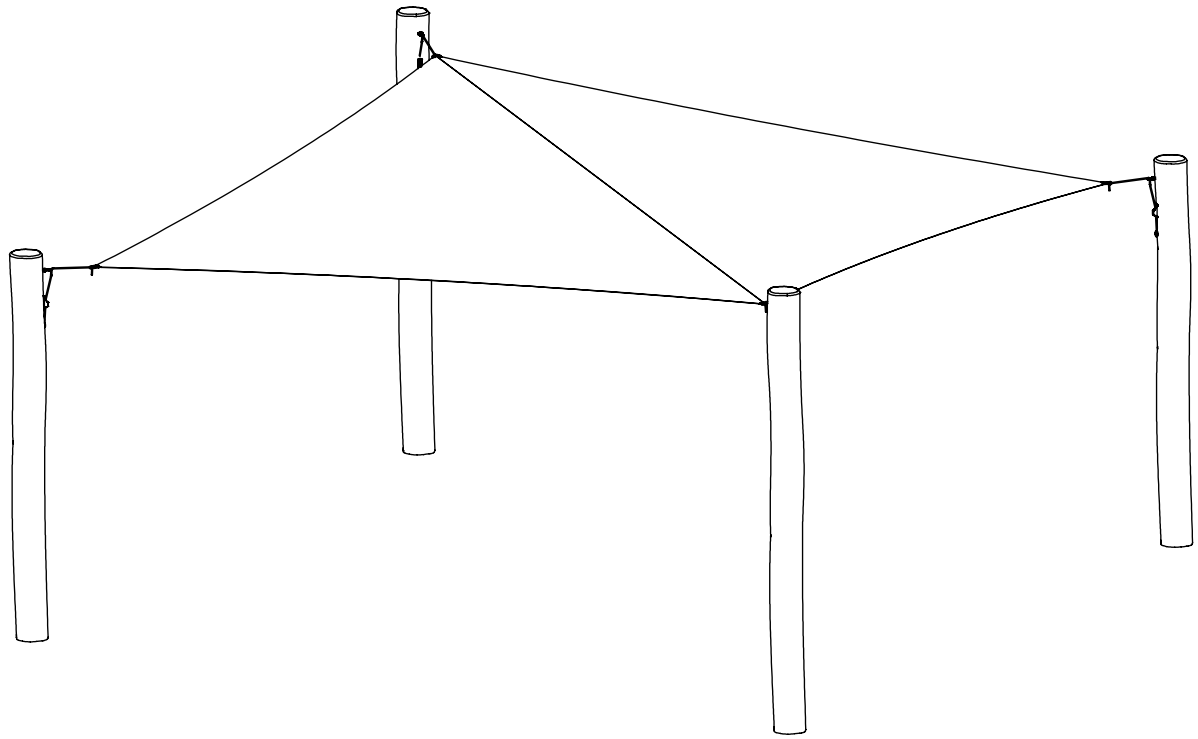

EN 1176 | x2 | 3h | 48h | K29 x4 >0,06m³

Ø3 | Ø3,5 | Ø5,5 | Ø8,5

v010
28.02.2024
D.P.
[cm]

vinci play

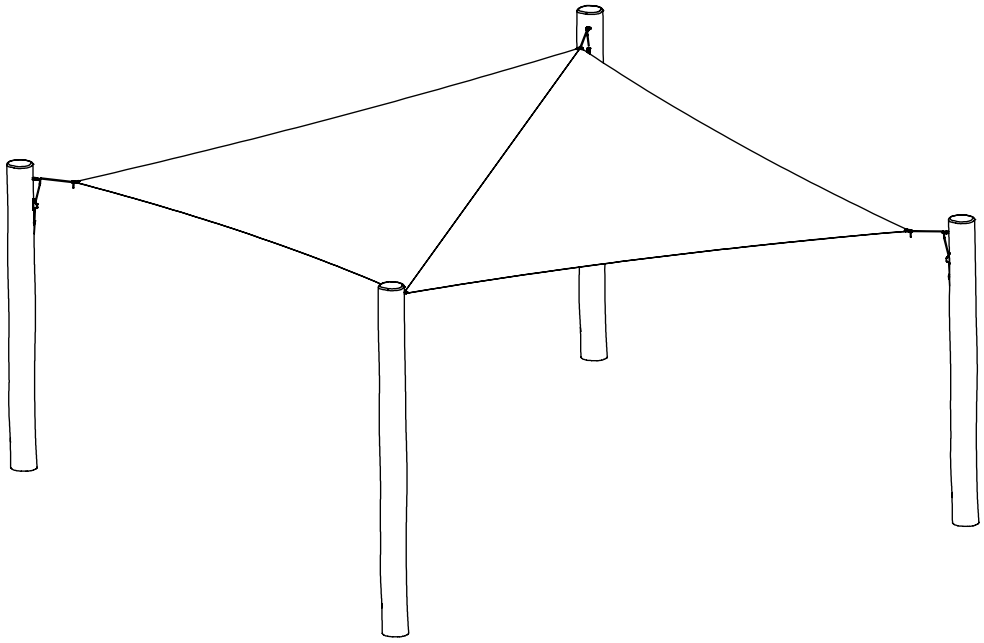

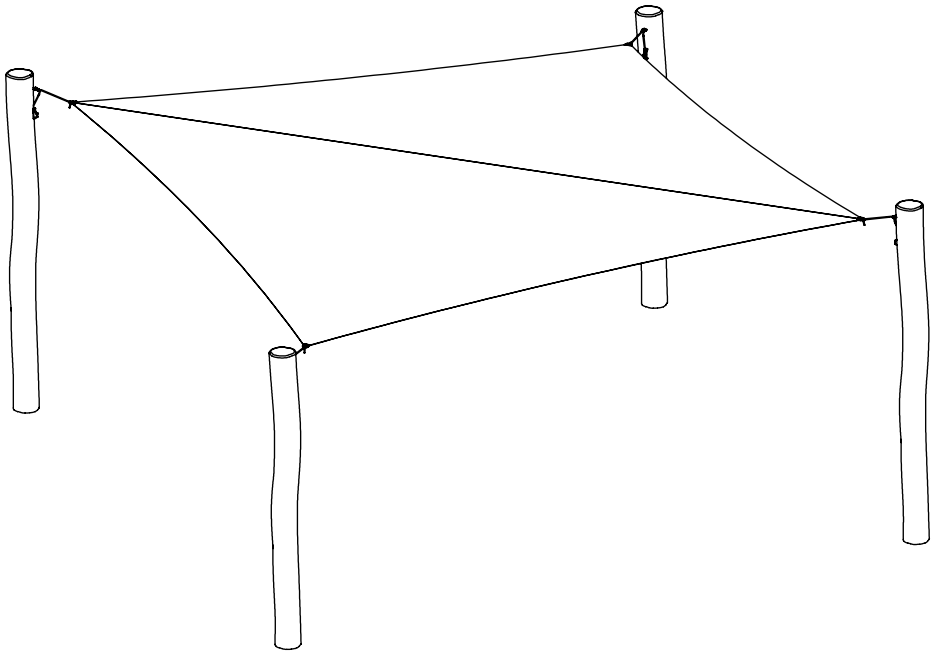

[cm]

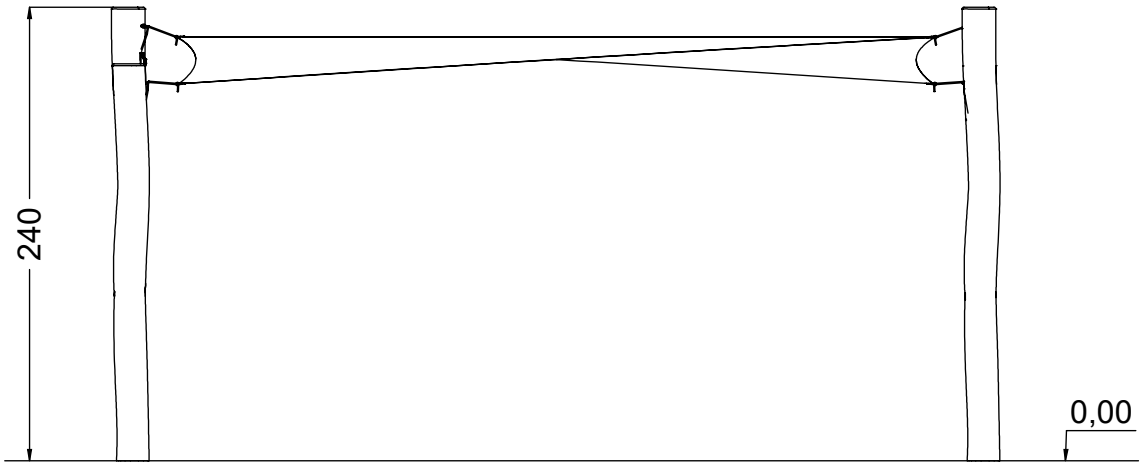

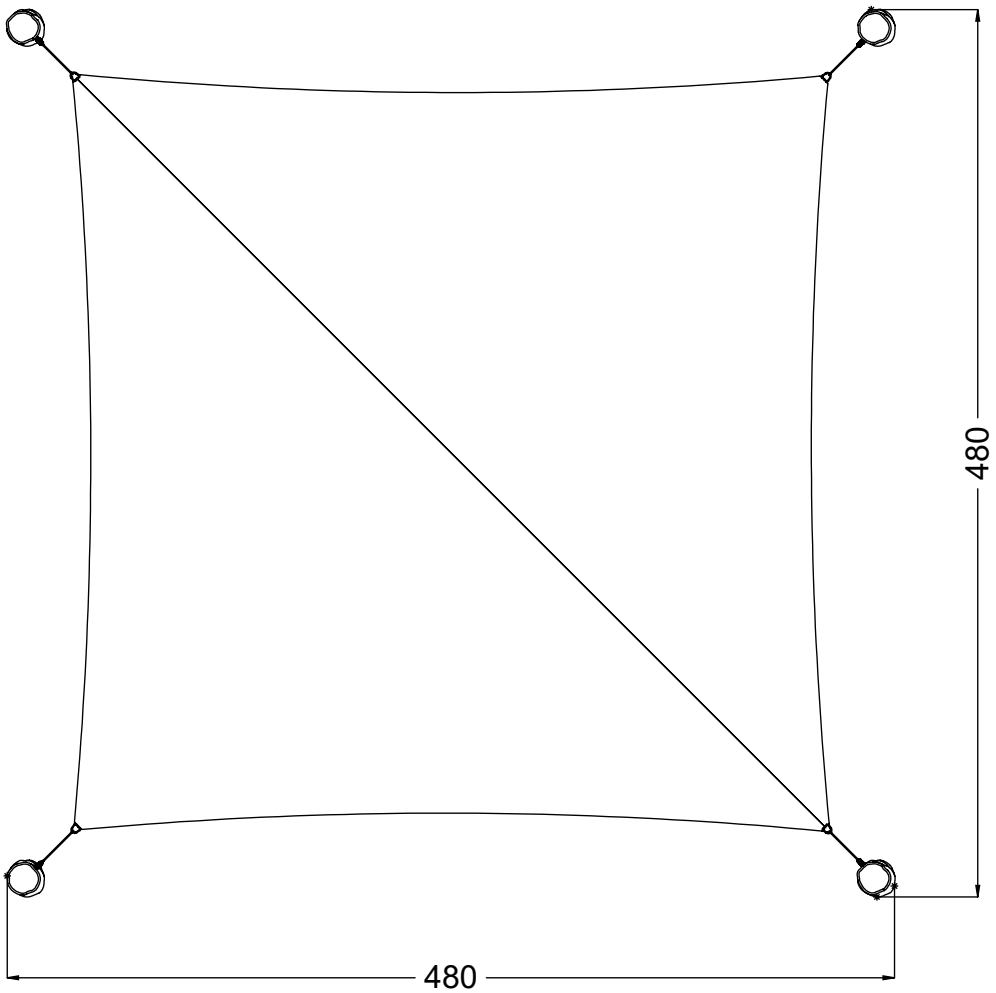

[cm]

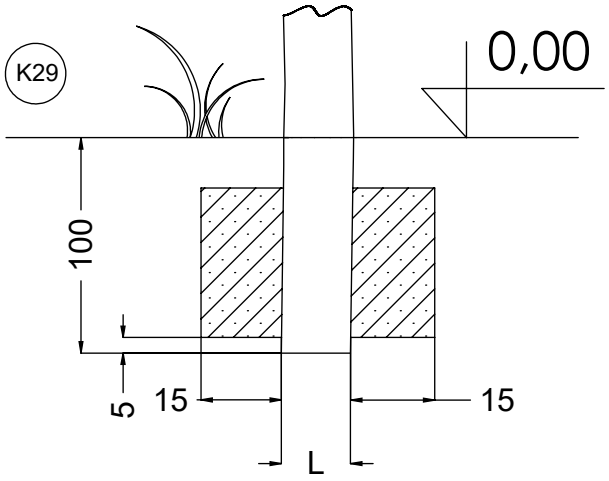

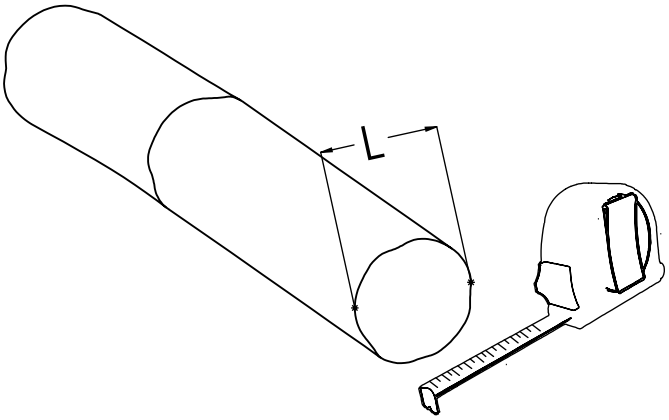

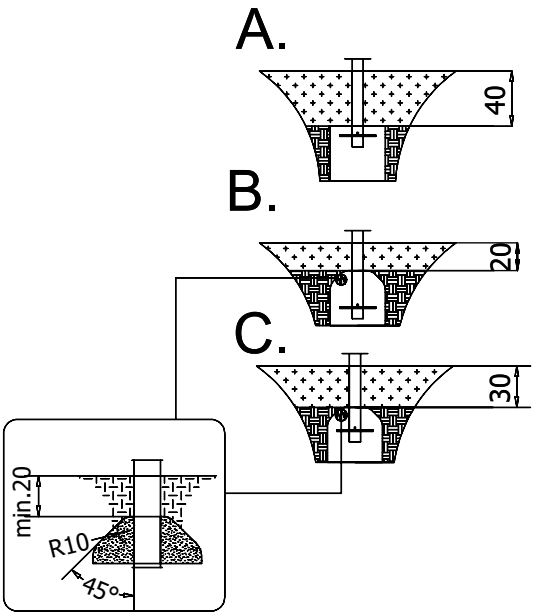

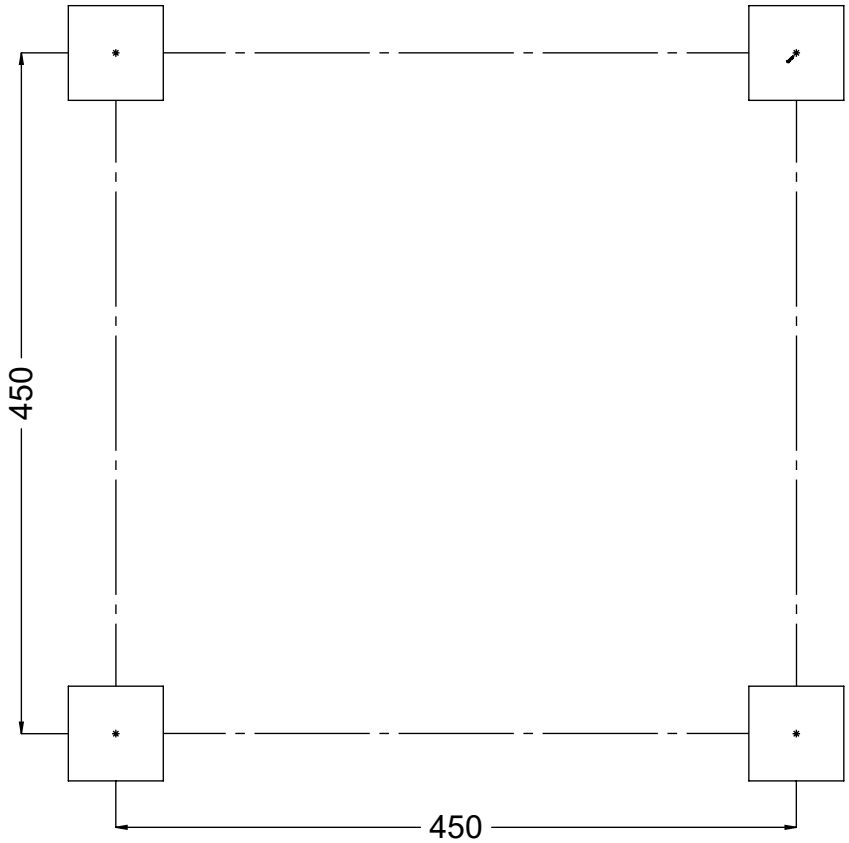

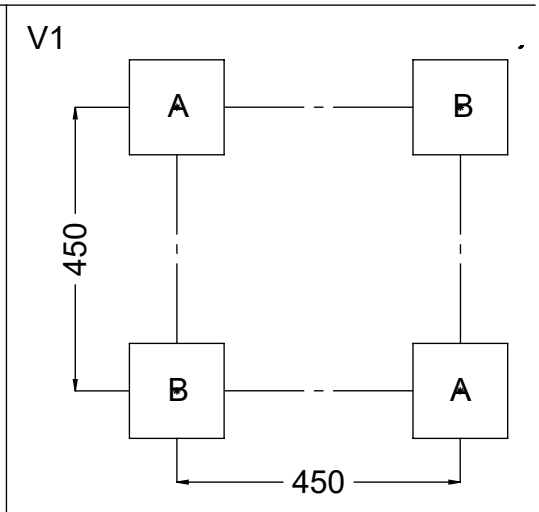

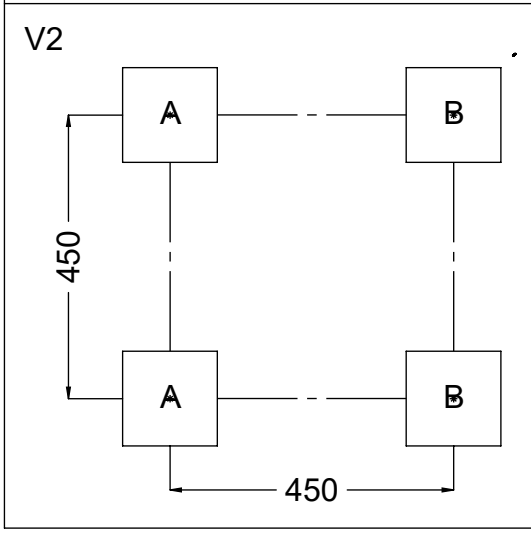

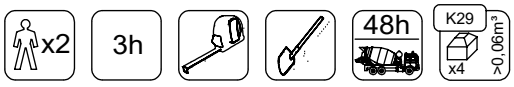

[cm]

vinci play

1271018 (A)
2x

1271019 (B)
2x

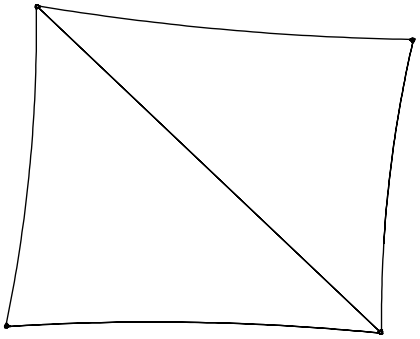

996549
x1

4x	12e160
1x	V001

[cm]

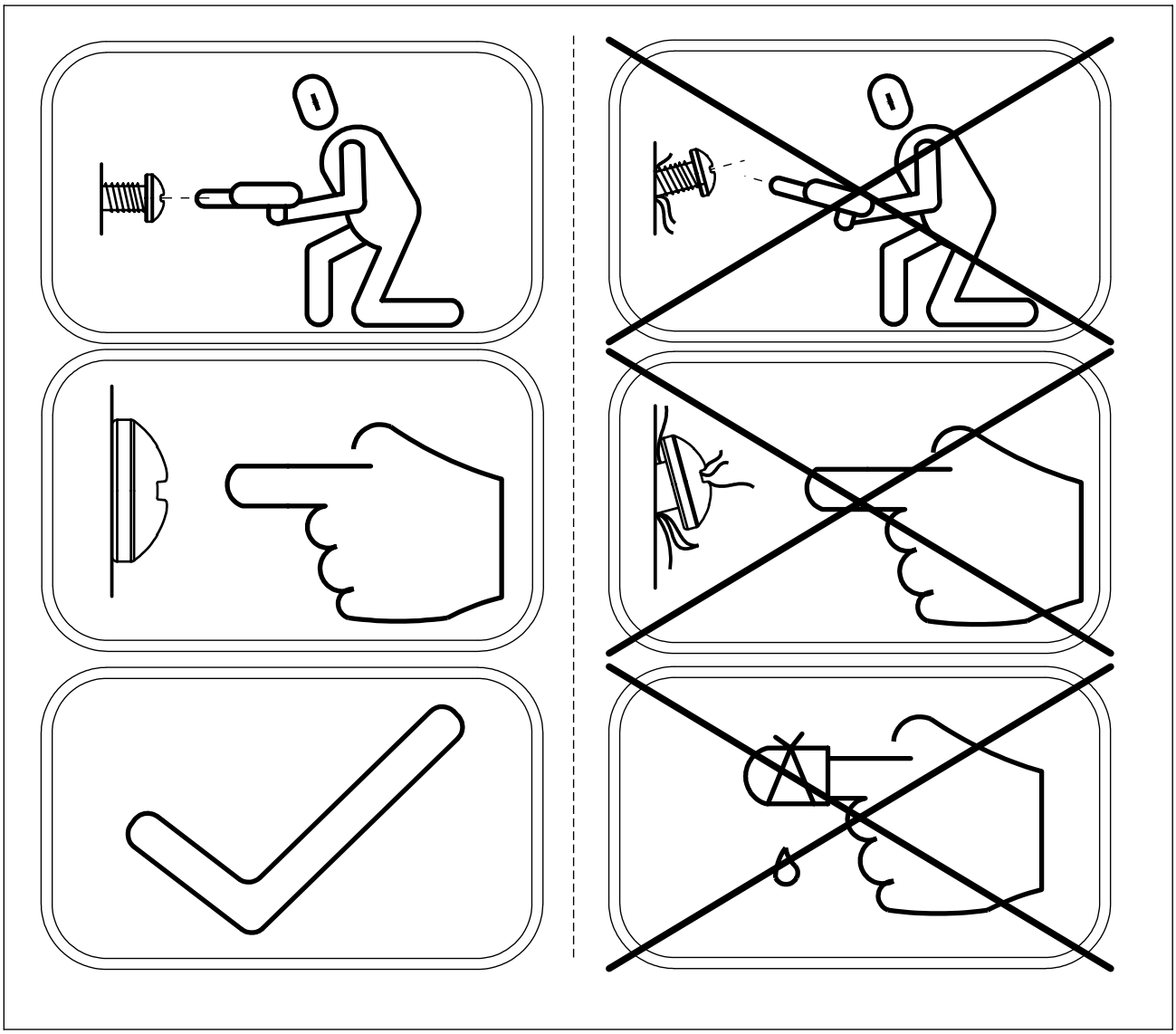

[cm]

1.

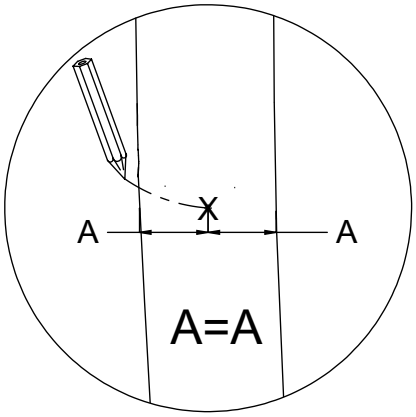

2.

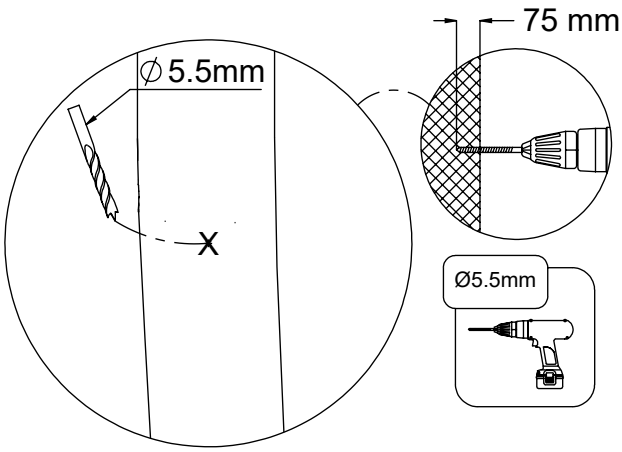

3.

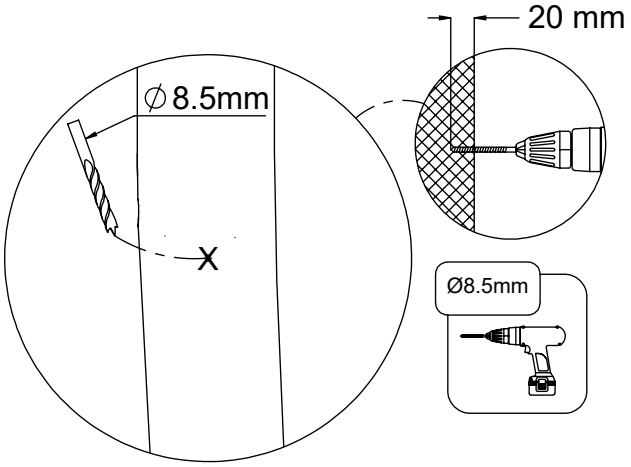

4.

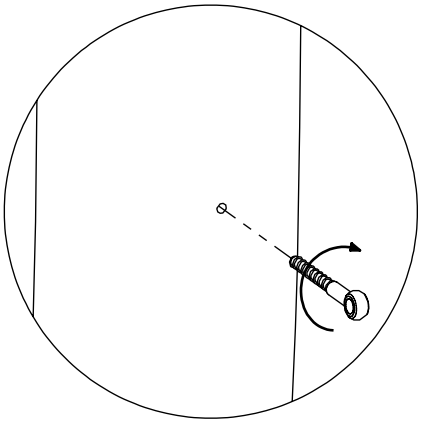

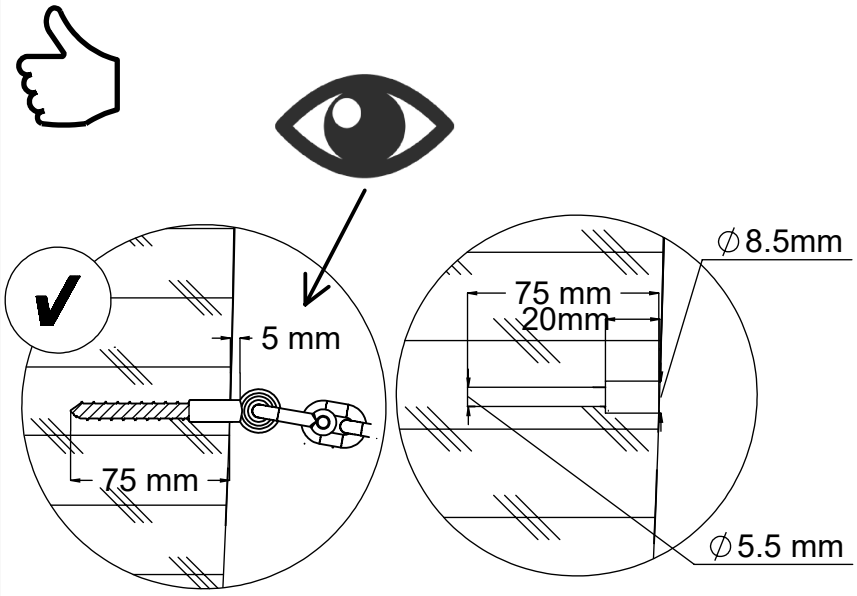

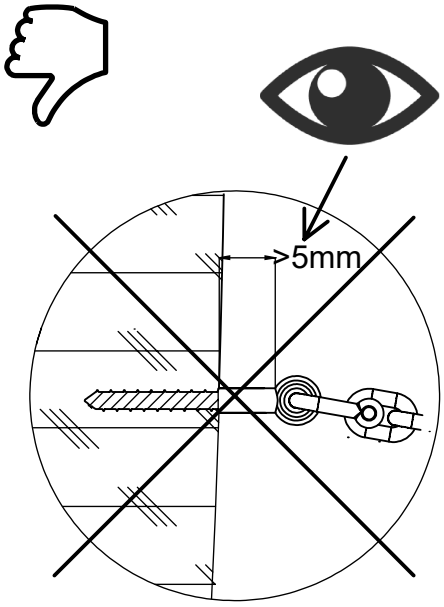

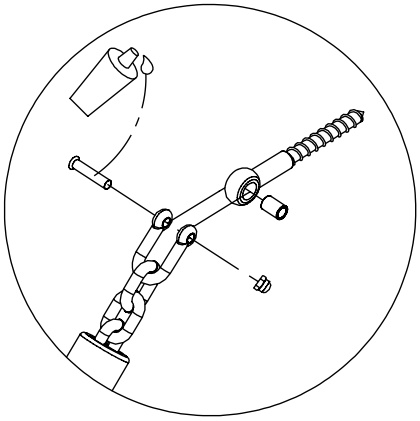

[cm]

vinci play

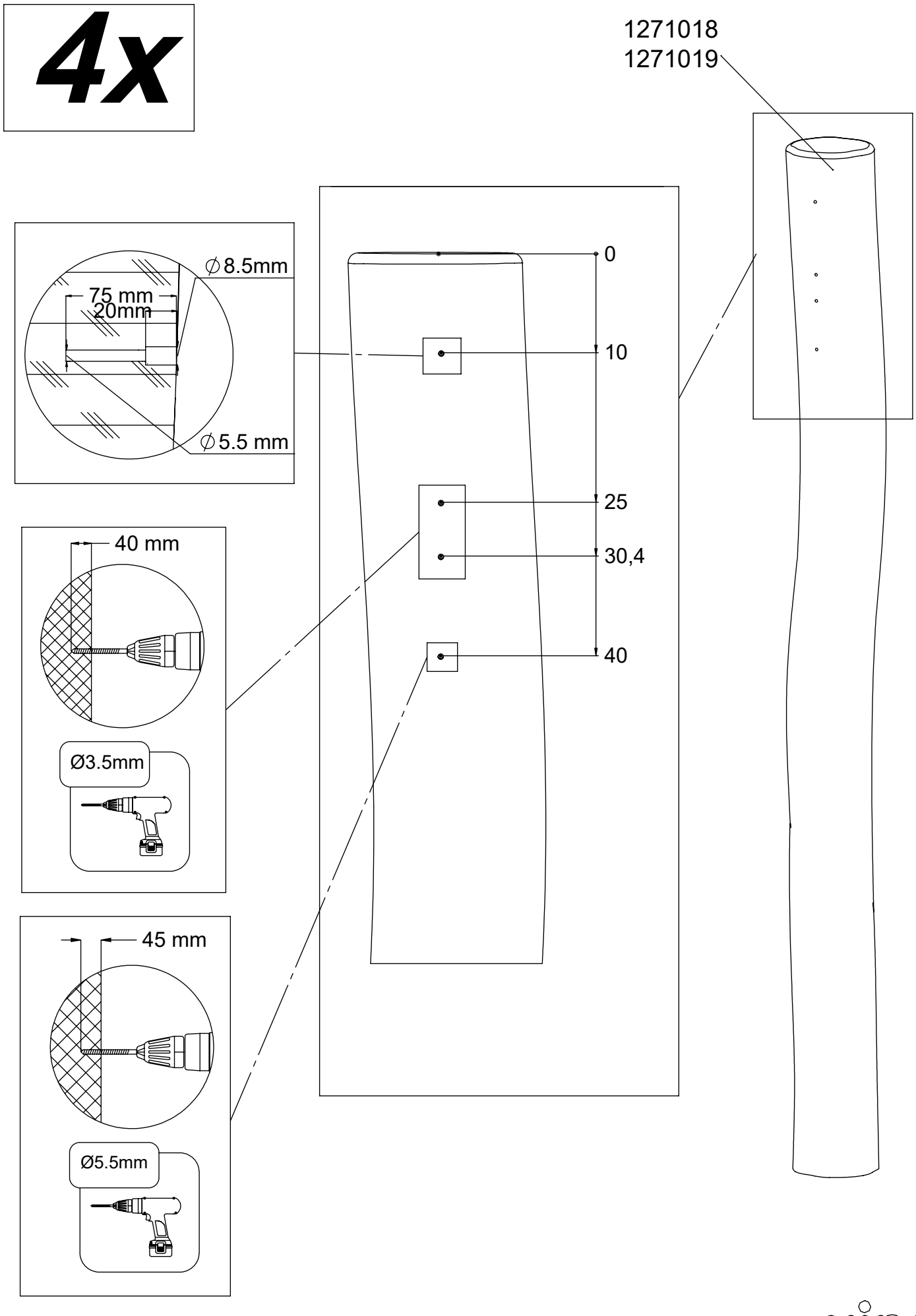
4x
1271018
1271019
∅8.5mm
75 mm
20mm
∅5.5 mm
0
10
25
30,4
40
40 mm
Ø3.5mm
45 mm
Ø5.5mm
[cm]
vinci play

4x

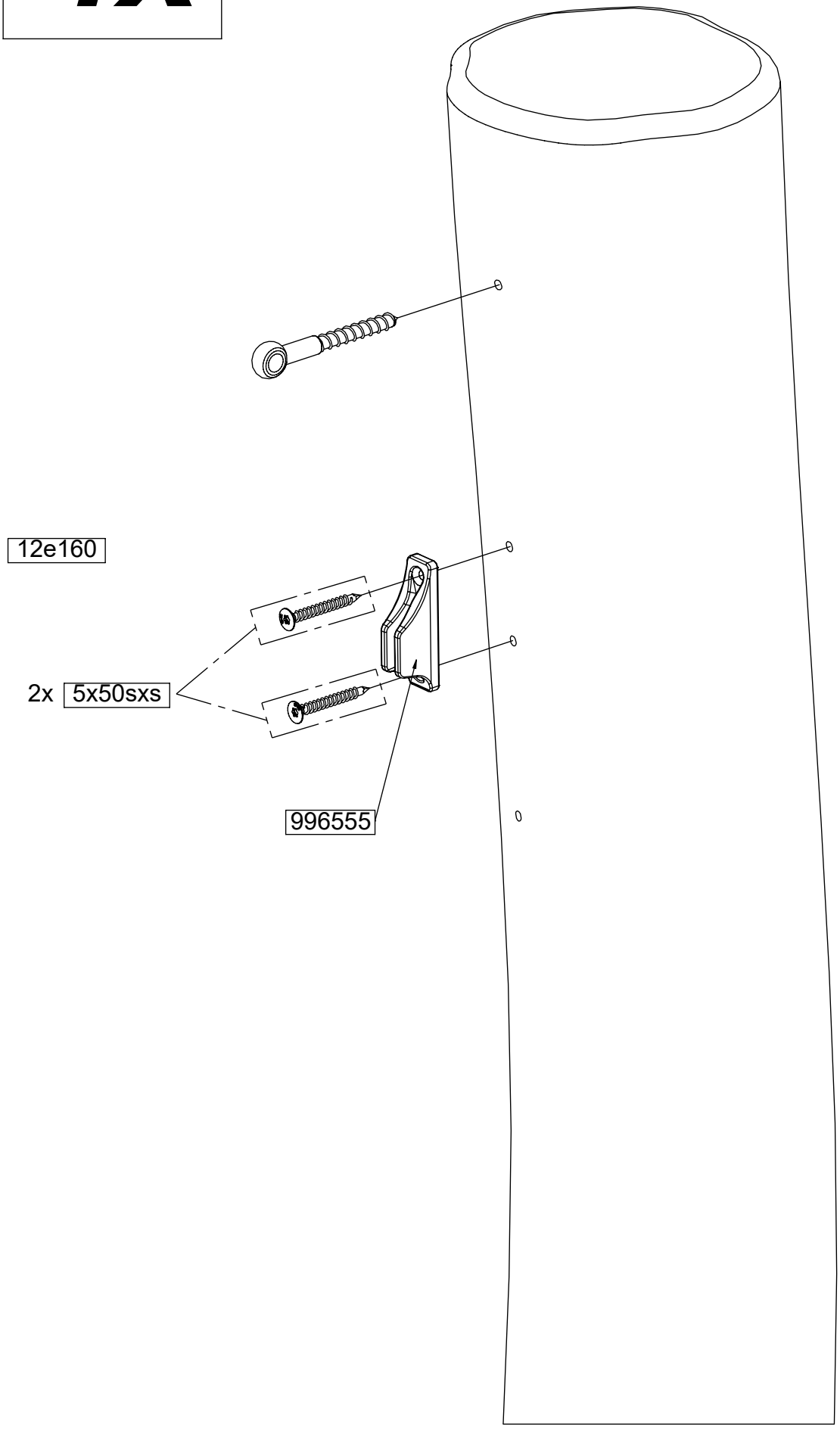

[cm]

vinci play

4x

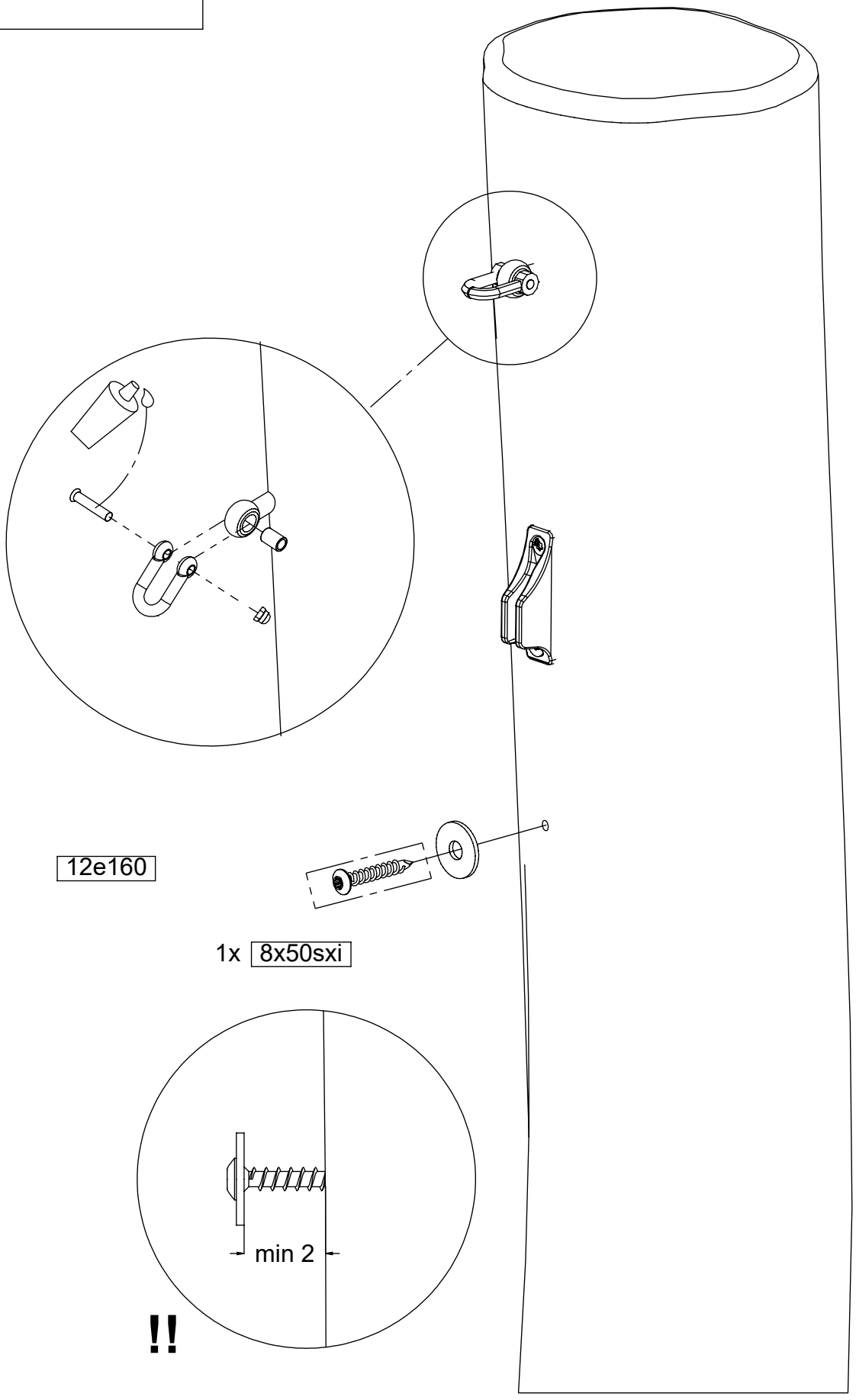

[cm]

vinci play

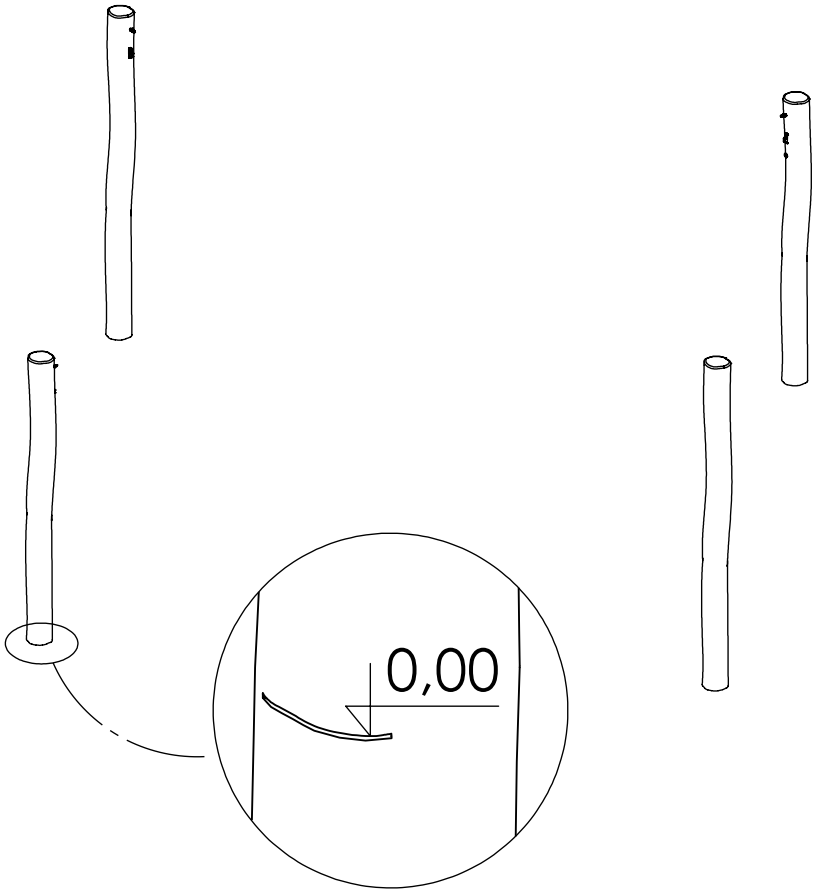

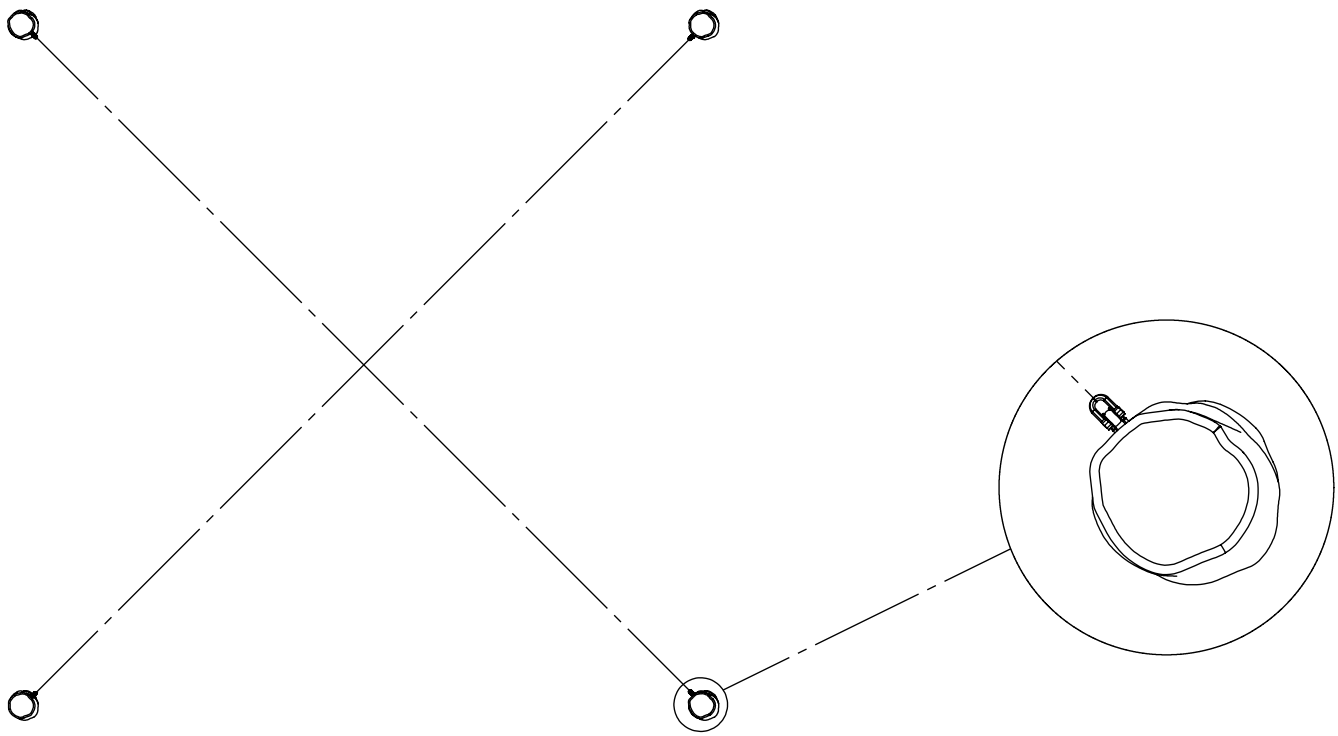

[cm]

1.

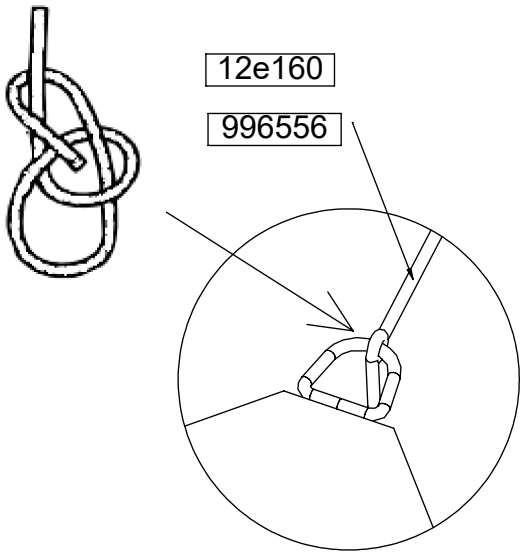

2.

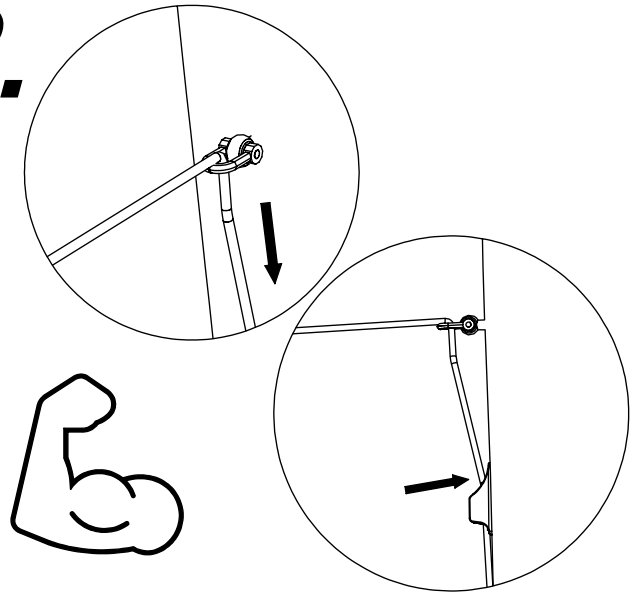

3.

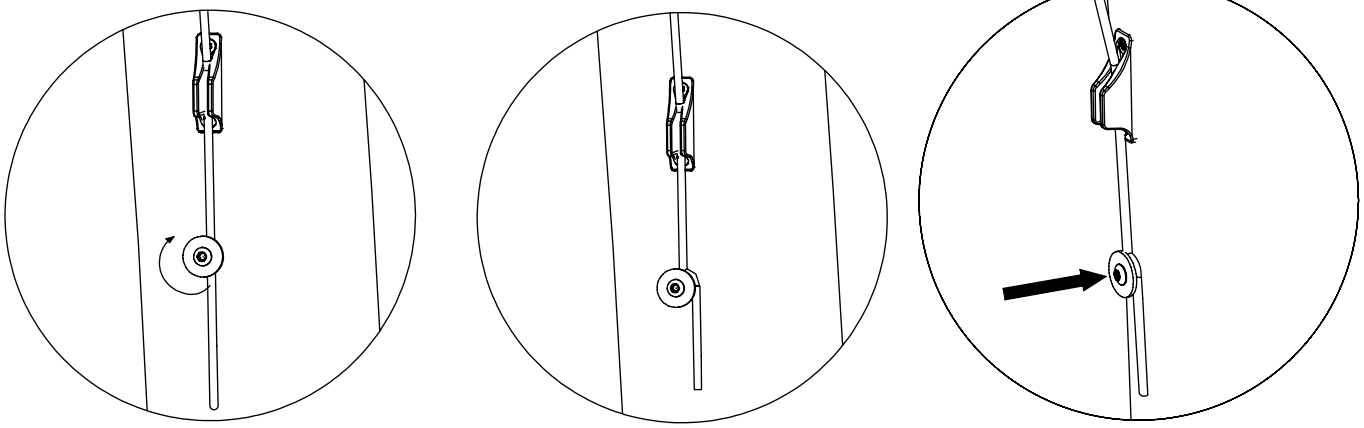

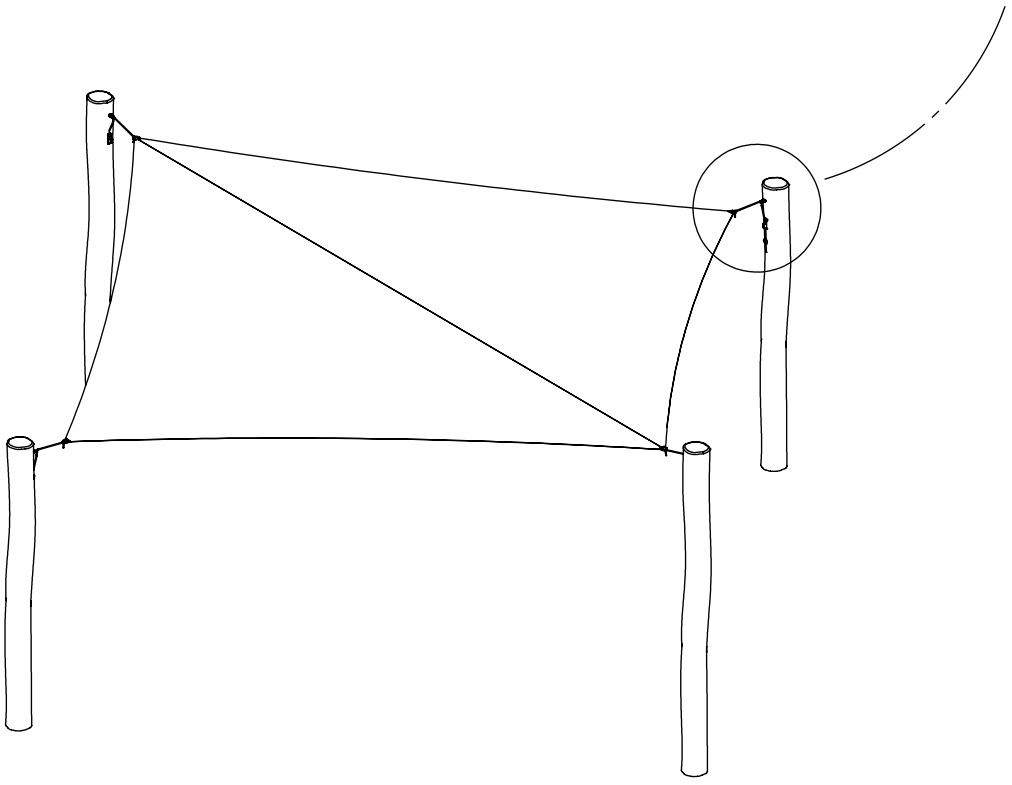

[cm]

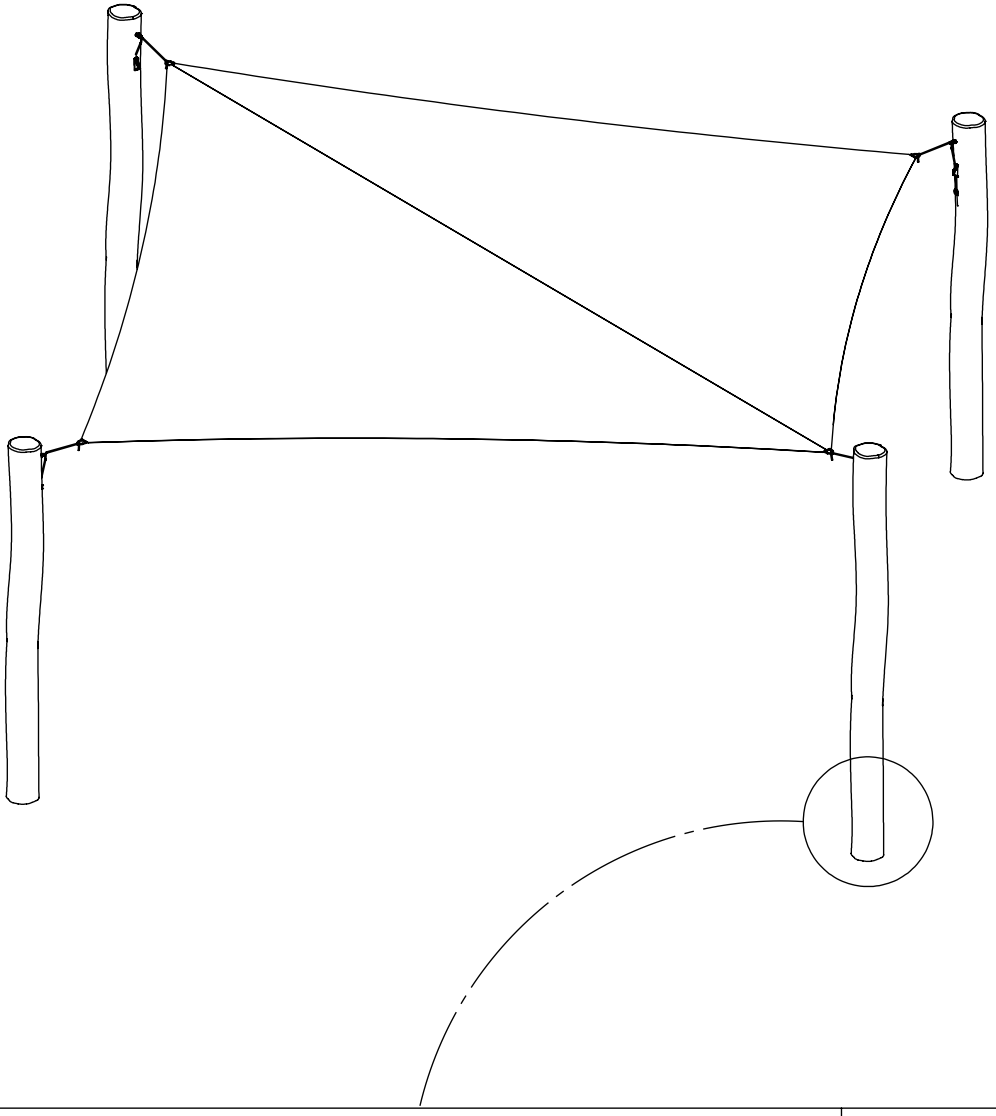

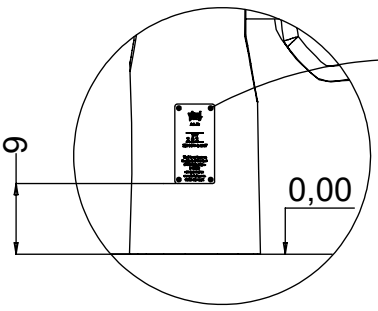
9
0,00

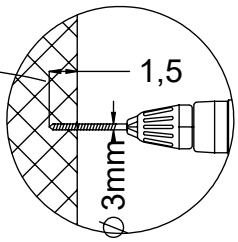
1,5
Ø 3mm

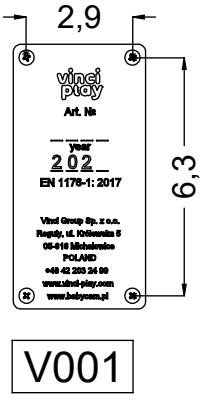
2,9
6,3
vinci play
Art. №
year
202
EN 1176-1: 2017
Vinci Group Sp. z o.o.
Reguły, ul. Królewska 5
05-816 Michałowice
POLAND
+48 42 203 24 99
www.vinci-play.com
www.babycom.pl
V001

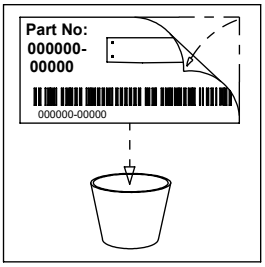
Part No:
000000-
00000
000000-00000

[cm]