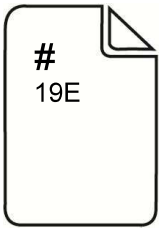


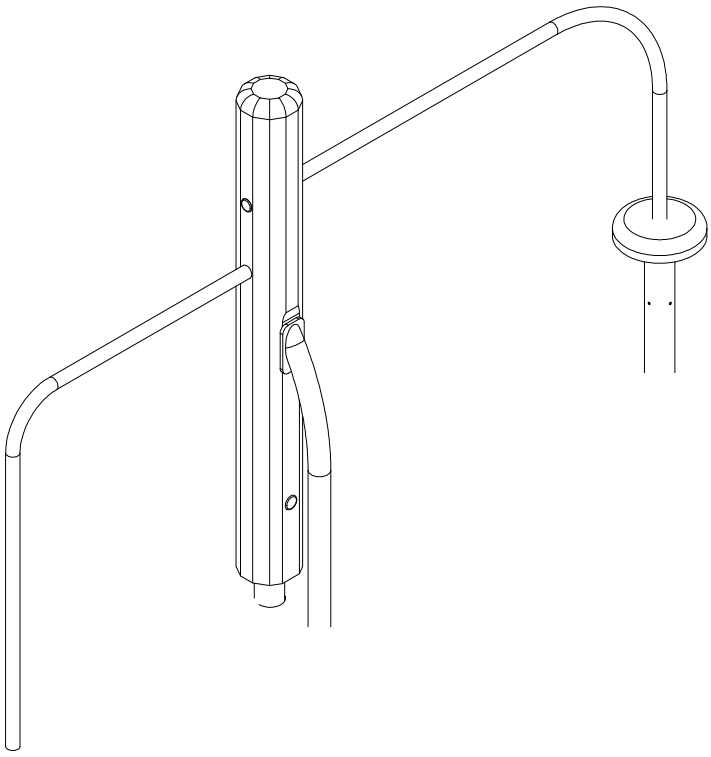

NORNA PLAYGROUNDS
designed for sustainable and creative play

SMART ROBINIA PRE-DRILLED SYSTEM

FSC www.fsc.org FSC® C105341 The mark of responsible forestry

25-04-2021 / Rev.: A

# 0301-009-002



( 1/50 )

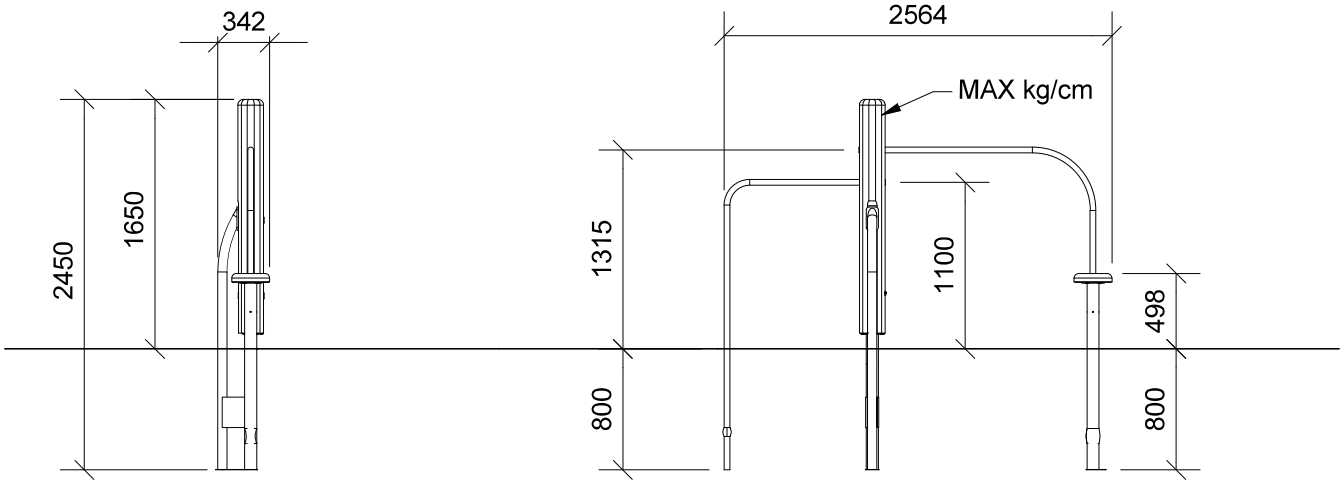


( 1/40 )

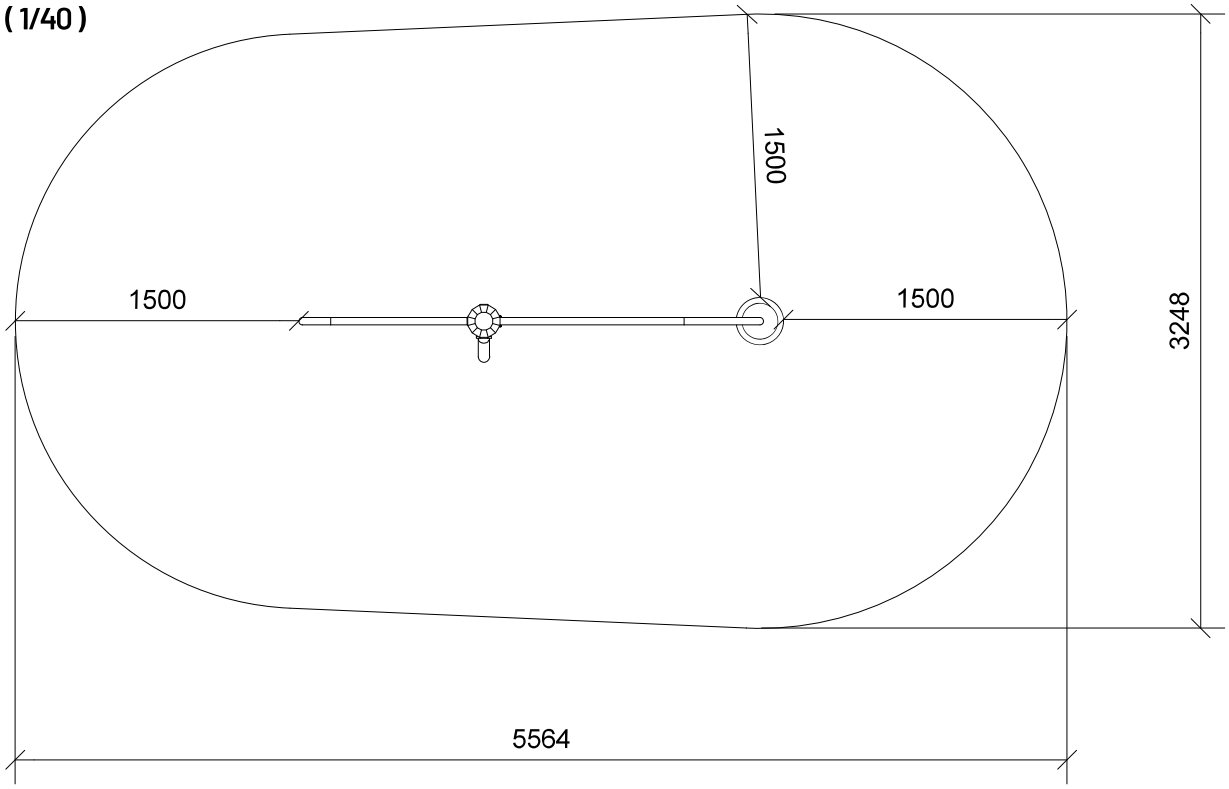

**NORNA PLAYGROUNDS A/S** • Virkefeltet 1, DK-8740 Brædstrup • Phone +45 7575 4199 • mail@norna-playgrounds • norna-playgrounds.com

This drawing is the property of NORNA PLAYGROUNDS A/S and pursuant to current legislation may not be copied, transferred to or used by any third party. Should this drawing be used, a fee of 10% of the assumed contract price will be charged.

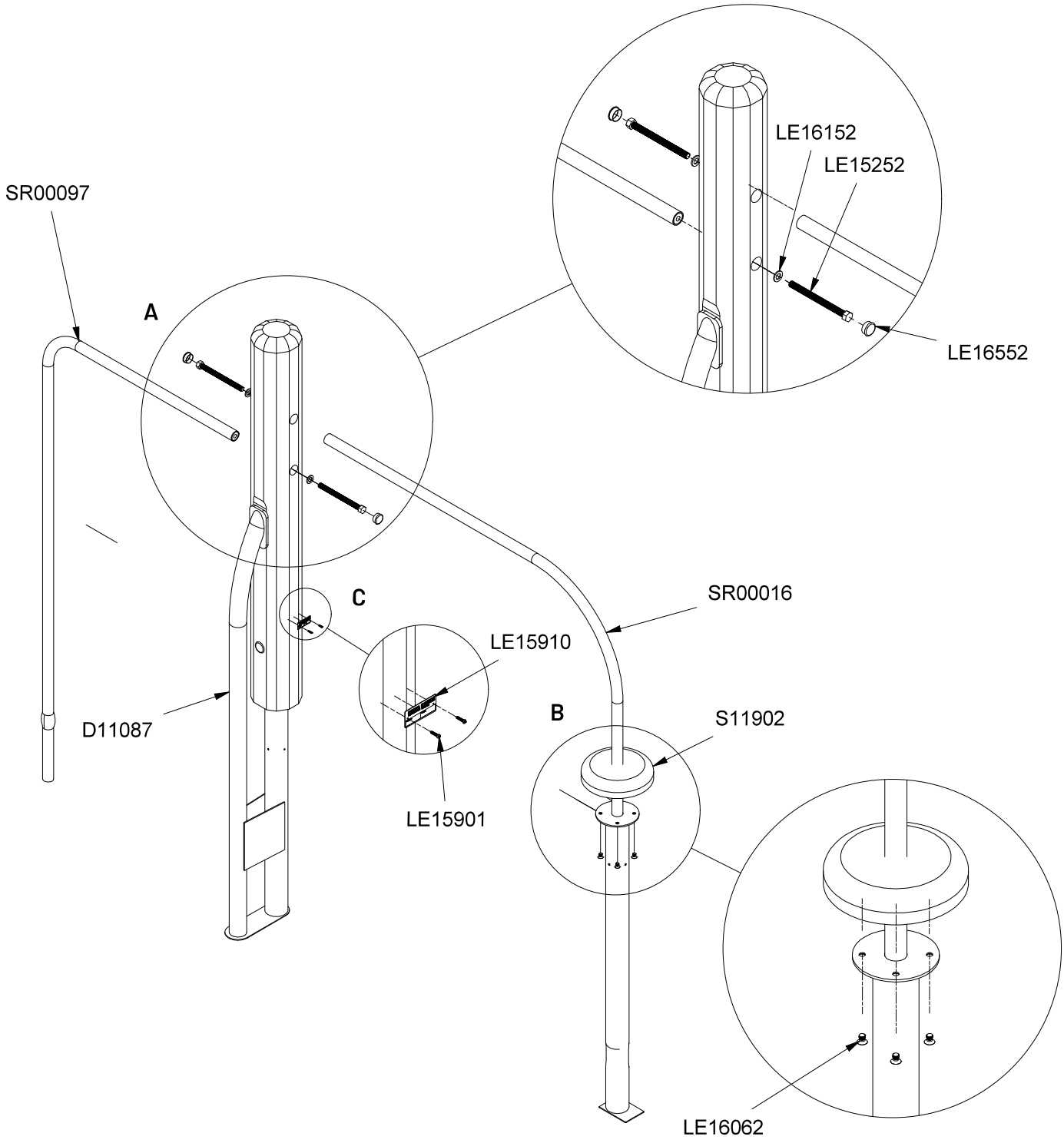


| Parts List | | |
|---|---|---|
| QTY | PART NO | DESCRIP. |
| 1 | SR00097 | Ø38 tube |
| 2 | LE15252 | M16x200 mm |
| 1 | SR00016 | Ø38/80 tube |
| 1 | D11087 | 330x2450mm |
| 2 | LE16152 | M16 - Ø30 mm |
| 2 | LE16552 | Ø34/38 mm |
| 4 | LE16062 | 10x16 mm |
| 1 | S11902 | Ø250/38 mm |
| 2 | LE15901 | 3x16, PH |
| 1 | LE15910 | Name tag |

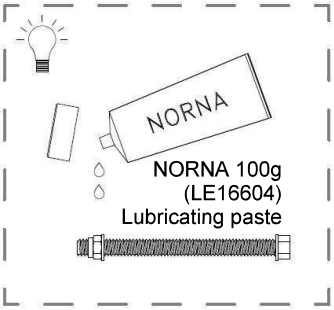

( 1/50 )

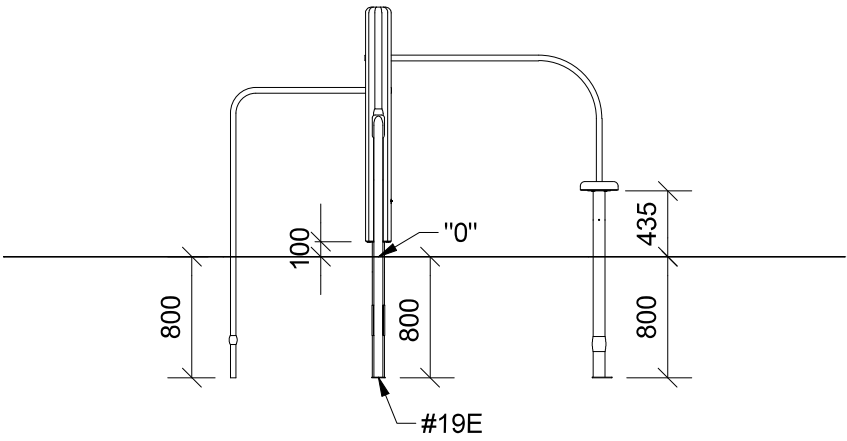

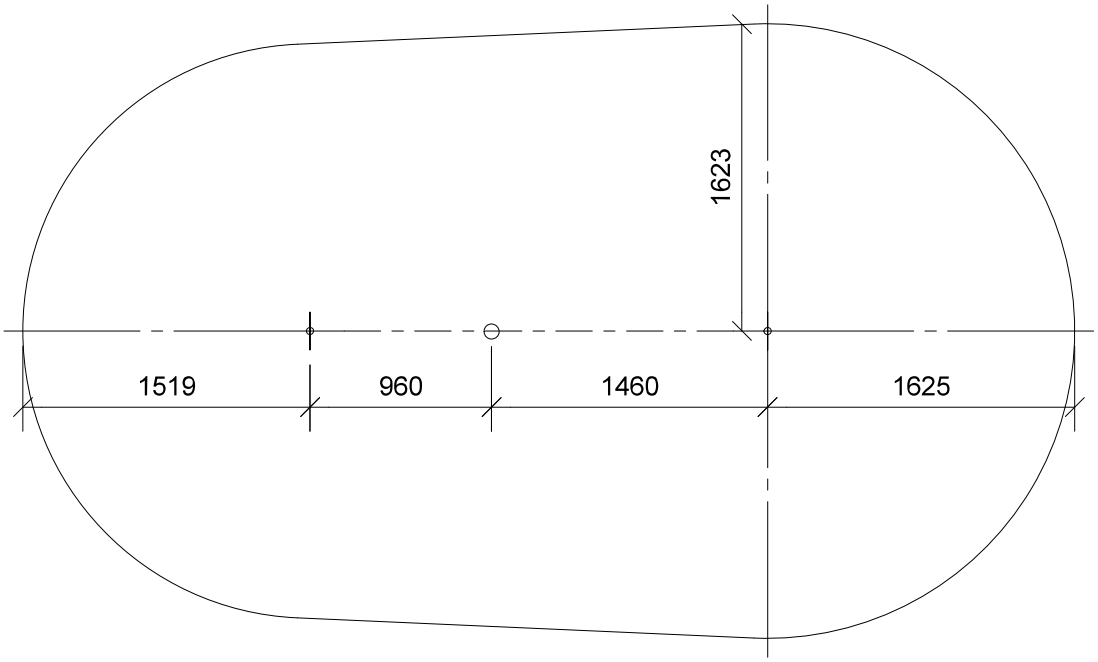
( 1/40 )