Climbing Pyramid

Article-no.: 7600

Installation and maintenance manual

Illustration: color example

Standard: multicolor

Edit: 20.07.2022

Table of contents

1. Bill of material 1
2. Technical data and notes 2
3. Installation instructions 3
3.1 Preparing foundations 3
3.2 Installation foundations 3
3.3 Mounting post 6
3.4 Mounting net 7
4. Dimension 10
5. Safety and user information 13
6. Change documentation 13
7. Replacement parts 14
8. Maintenance manual 18

1. Bill of material

1 post of steel, hot dip galvanized	L=335 cm Ø 8,89 cm
	weight approx. 25 kg
1 plastic tube	L=45 cm Ø 15 cm
1 net climbing pyramid	weight approx. 50 kg
4 turnbuckles M 16	
4 chains 65 x 1 cm	
4 anchor elements	
4 shackles 1,2 cm	

Not included in delivery but needed is:

reinforcing steel mat Q188

4 pcs. 0,80 x 0,80 m

to reinforce the foundations.

2. Technical data and notes

- Impact surface (LxW): 5,25 x 5,25 m
- Use zone (LxWxH): 5,25 x 5,25 x 3,60 m
- Maximum fall height: 0,95 m
- Device space (LxWxH): 2,85 x 2,85 x 2,50 m
- Kind of usage : standing/climbing
- Required free space: 1,00 m around the device
  1,80 m above the highest horizontal rope
- Shipping dimensions (LxWxH): 80 x 60 x 60 cm
  335 x 10 x 10 cm
- Weight complete: 75 kg
- Age restriction: 3 years
- Intended age group: 3 to 10 years
- Number of user: 14
- For a maximum fall height ≤ 1,00 m safety surface must be according to EN 1176-1:2017 4.2.8.5 table 4.

- Spare parts for the climbing pyramid 250 have to be purchased from the manufacturer only.

- Certificated: AfPS GS 2019:01 PAK
  DIN EN 1176-1:2017
  DIN EN 1176-11:2014
  EN 1176-1:2017
  EN 1176-11:2014

3. Installation instructions

Please note the minimum size of the foundations of 1,00 m below the playground level. For the use of 0.40 m fall protection material, the playground level is marked on the device.

3.1 Preparing foundations

To ensure the required safety and smooth assembly, all dimensions and specifications according to drawing 1-9 must be observed.

Use concrete of quality C20/25.

The soil below the foundations must have a permissible soil pressure of $\sigma zul \geq 150$ kN/m².

3.2 Installation foundations

Production of the middle foundation:

1. Dig pit (0,80 x 0,80 x 1,00 m).
2. Fill in 0,15 m concrete.
3. Let the concrete harden completely.
4. Determine the centre of the area, vertically align the plastic tube and fix in place.
5. Fill in another 0,45 m of concrete, flush with the tube.
6. Let the concrete harden completely.

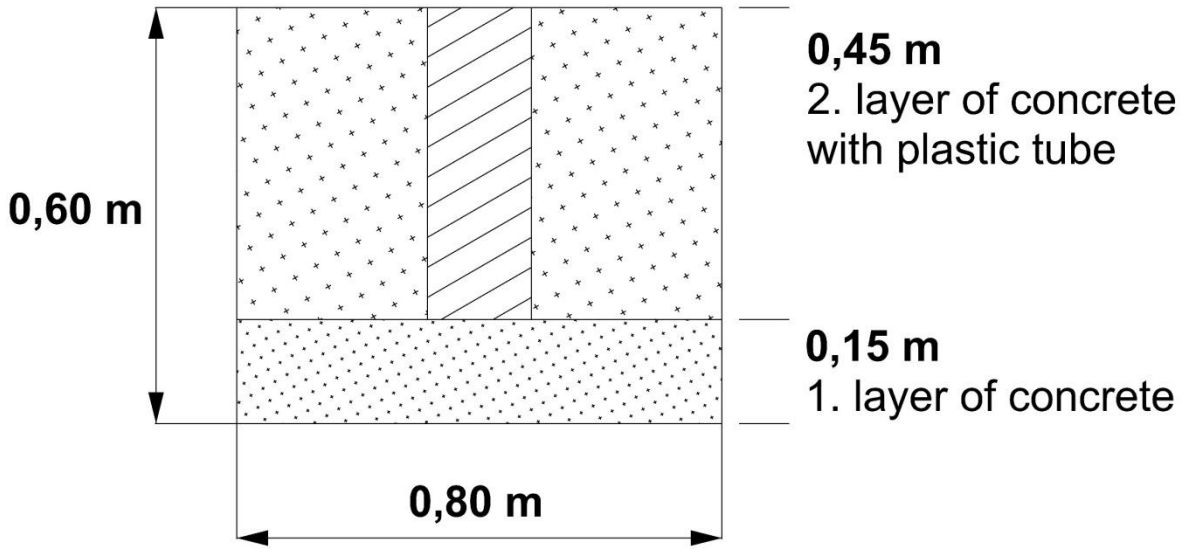

Drawing 1: Construction of the middle foundation with plastic tube

Production of the edge foundations:

1. Dig 4 pits (0,95 x 0,95 x 1,00 m).
2. Fill in 0,55 m of concrete.
3. Position the reinforcing steel mat in the middle.
4. Bring in anchor element centre in the middle; take care of right position to the net. Think about the hole of the anchor. This has to be 2-3 cm above the foundation.
5. Fill in another 0,05 m of concrete.
6. Let concrete complete hardening.

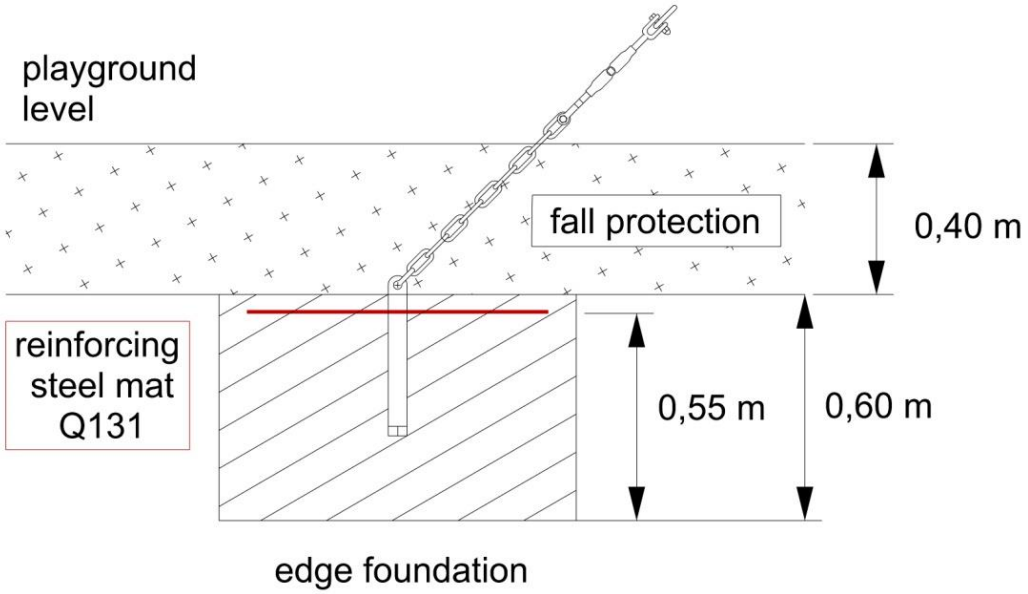

Drawing 2: Construction of the edge foundation with a reinforcing steel mat

3.3 Mounting post

1. Place the post in the plastic tube, align it in the middle and fix it.
2. Fill the remaining gap between the plastic pipe and the post with concrete.
3. Let concrete complete hardening.

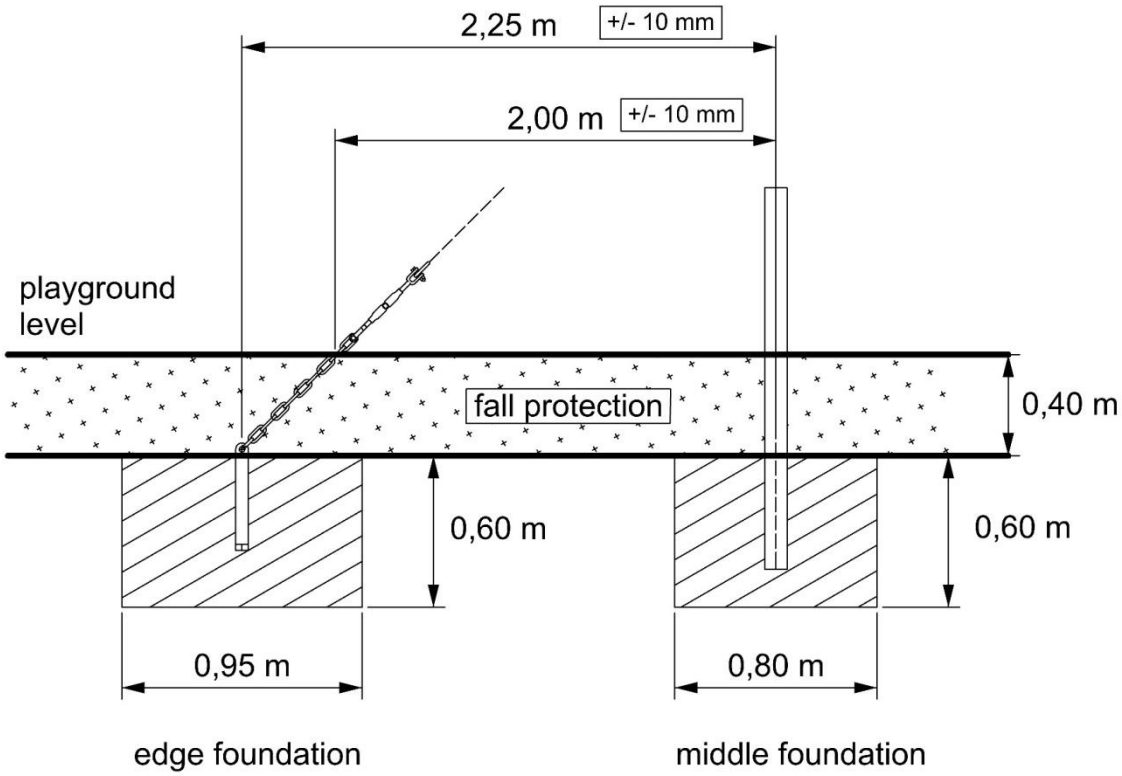

Drawing 3: Distance between the foundations and in the device space

3.4 Mounting net structure

To assemble and install the climbing pyramid, qualified personnel of at least 2 people are required.

1. Place the cap with the net on the post.
2. Open turnbuckles complete. Connect the individual chains to the foundation anchors using the shackles 1,2 cm. Connect the turnbuckles on the other side of the chains. Connect turnbuckles to the rings at the bottom of the net and align the net.

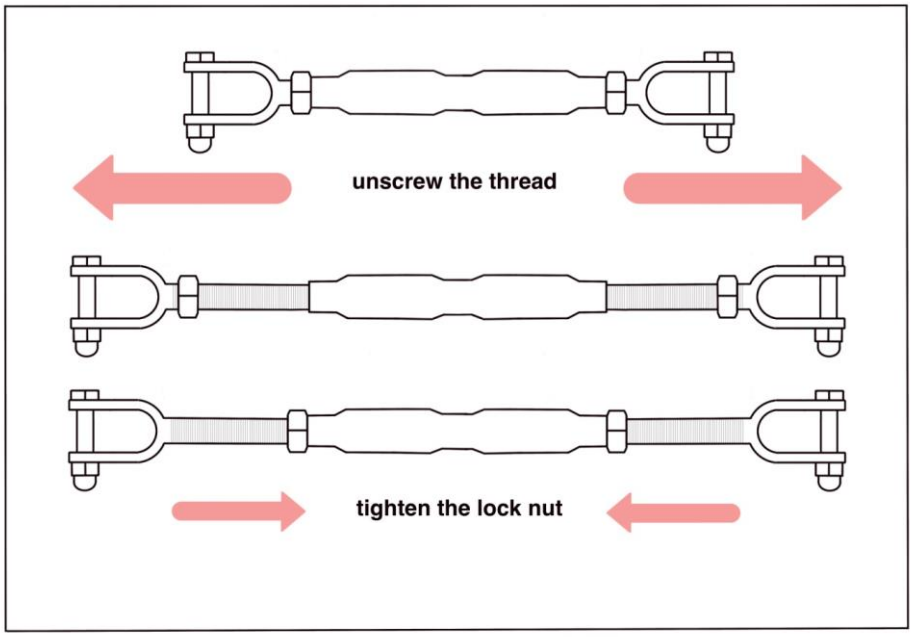

Drawing 4: Functional principle of a turnbuckle

3. Tighten the turnbuckles until the ropes running to the cap are taut and give a maximum of approx. 4 cm under F 700 N pressure.

Secure the turnbuckle against unscrewing with a lock nut!

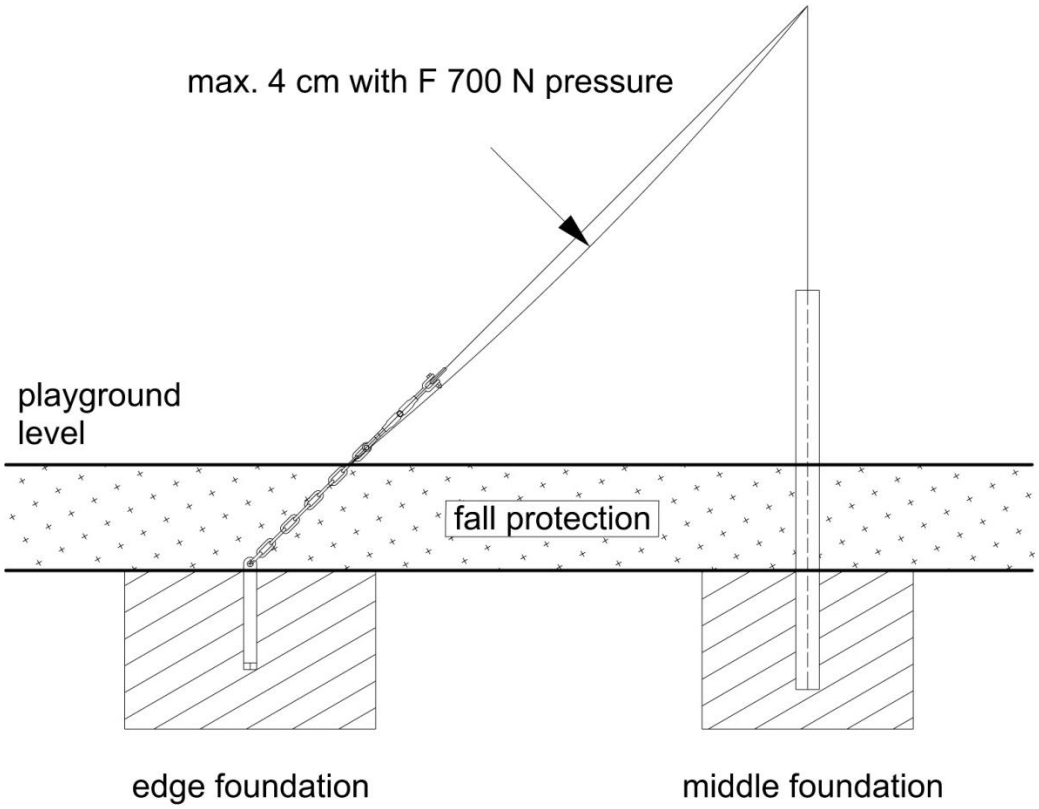

Drawing 5: Pressure-load test

4. If the clamping distance of the turnbuckle is not sufficient to bring enough tension on the 4 main support cables, these must be secured in their position, for example with a ratchet strap. Open the turnbuckles again and re-attach 1 to 3 chain links in the direction of the foundation. Then repeat point 3.
5. Top up the fall protection.

4. Dimensions

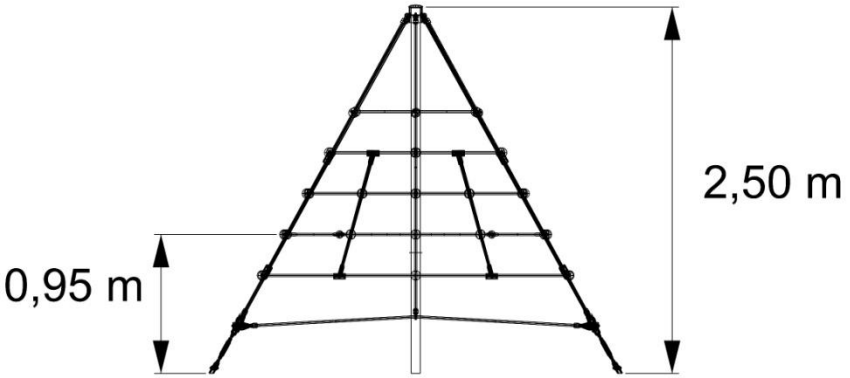

Drawing 6: Front view with net level

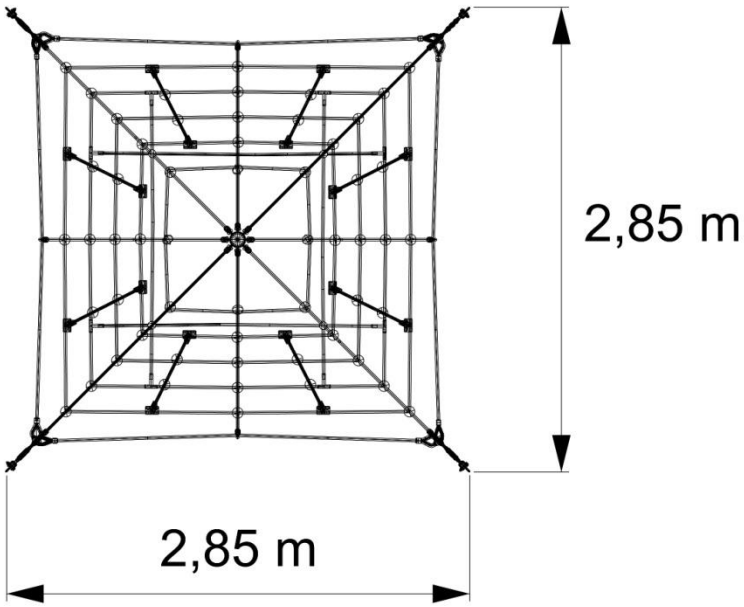

Drawing 7: Device space

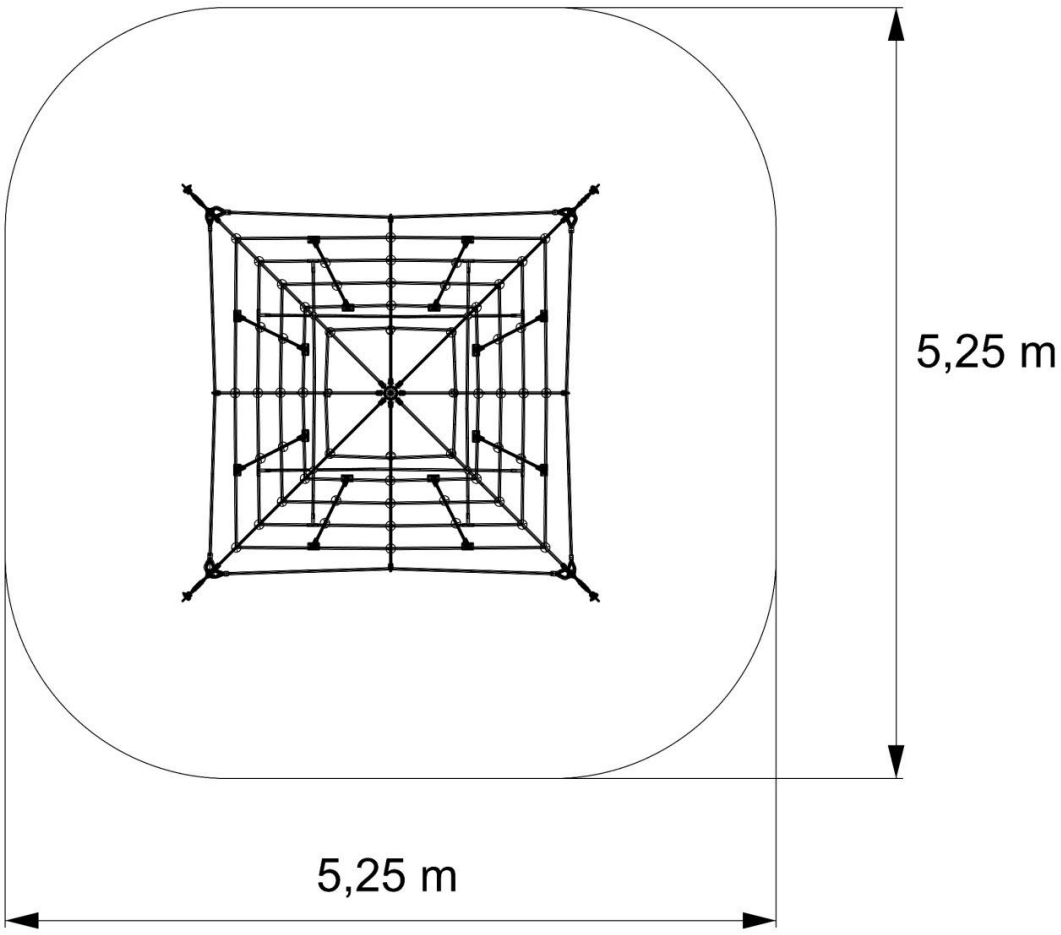

Drawing 8: Top view with use zone

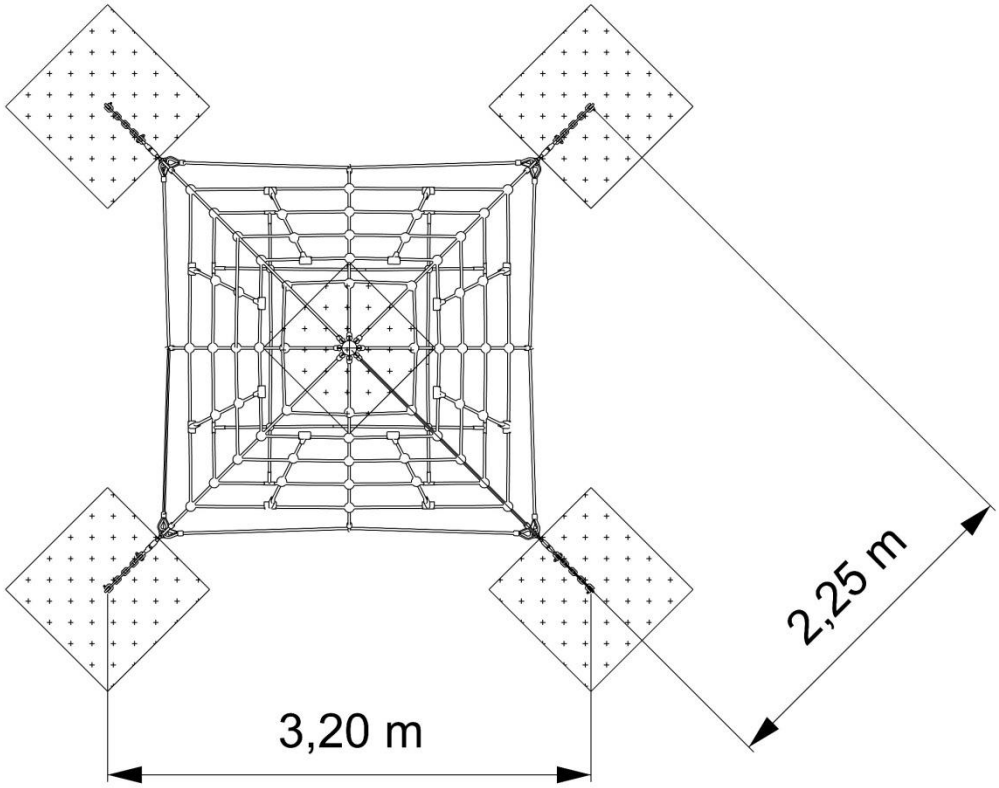

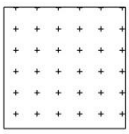

middle foundation
0,80 x 0,80 m

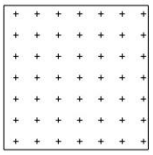

edge foundation
0,95 x 0,95 m

Drawing 9: Foundation plan

5. Safety and user information

- Do not carry any fire, naked flames, burning cigarettes or similar, knives or other sharp-edged objects with you.
- Do not wear high-heeled or sharp-edged shoes when climbing.
- Do not cut ropes or set them on fire!
- Do not loosen screws or nuts on shackles, turnbuckles or ball and T-connections!
- Do not jump off the pyramid or push other climbers!
- Do not eat or drink on the pyramid.
- No consumption of alcohol or narcotics on the device.

Check the tension of the ropes after 2 weeks and re-tension if necessary!

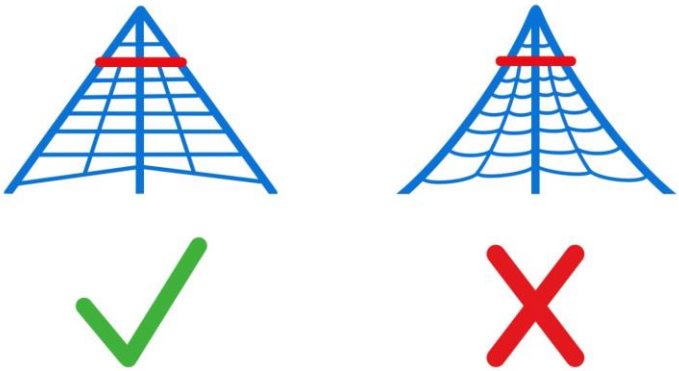

6. Change documentation

01-Oct-2021: New drawings – new layout

7. Replacement parts

Net structure **Climbing Pyramid** Illustration can deviate	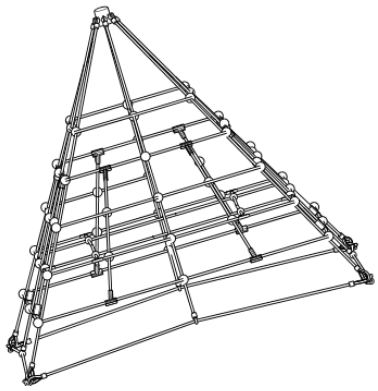
Post for **Climbing Pyramid** Illustration can deviate	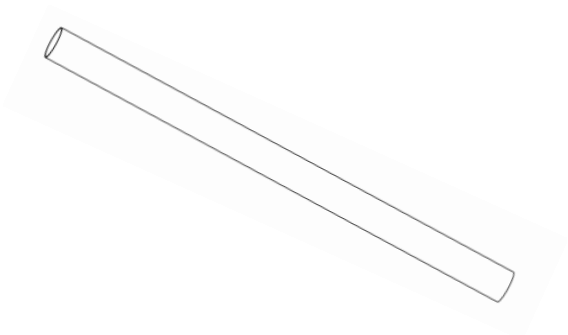
Turnbuckle M16 Illustration can deviate	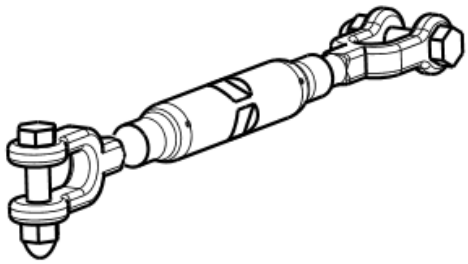

Slat for foundation **Climbing Pyramid** Illustration can deviate	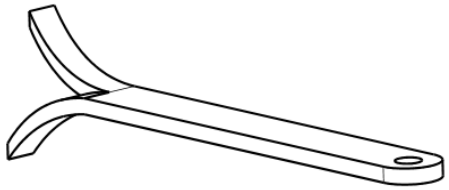
Chain 10 mm **similar DIN 763 galvanized** Illustration can deviate	
Shackle M12 galvanized Illustration can deviate	

Shackle M6 galvanized Illustration can deviate	
Transverse threaded bolts **M8 x 15** Illustration can deviate	
Eyebolt **M8 x 40** Illustration can deviate	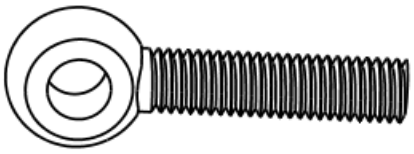
Plastic tube Illustration can deviate	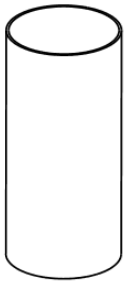

8. Maintenance manual

Special Information:

- For heavily used or vandalized playgrounds, a daily inspection may be required.
- Control logs are to be kept.
- The checks must be carried out by knowledgeable staff.
- If safety-critical serious defects are detected during an inspection, they must be remedied immediately. If this is not possible, the system must be excluded from use, e.g. by decommissioning or dismantling.
- If a piece of equipment needs to be removed, e.g. for maintenance or repair, all anchors or foundations remaining in the ground should be removed or covered with covers. The device should be locked for use.
- It has been shown that one post items can pose higher risks to their stability; the stability test should therefore be carried out at least twice a year.
- The strength of the screw connection must be checked no later than 14 days after installation. Loose connections need to be tightened.

Maintenance manual *All steps could also be necessary more often depending on the location / external influences*	1 to 3 weeks (visual inspection)	1 to 3 months (operational inspection)	1 time per year (main inspection)
Check for loss or vandalism.	X	X	X
Check the surfaces of metal and plastic for sharp-edged elements, scratches, cracks or similar and, if necessary, grind or renew.	X	X	X
Replace missing parts.	X	X	X
Remove dirt and other objects (stones, broken glass, etc.).	X	X	X
Check moving parts for easy operation.		X	X
Check the coverage of the foundations.		X	X
Check all fasteners and attachments for tightness and loss, tighten or replace.		X	X
Check screw connection and tighten if necessary.		X	X
Check ropes and rope connections for tightness and loss.		X	X
Maintenance manual	weeks (visual inspe	hs (operational .	per year (main inspe

All steps could also be necessary more often depending on the location / external influences			
Testing the stability of the device.		X	X
Check for traps.		X	X
Testing the fall protection coating.		X	X
Expose stand posts to the top of the foundation and check for corrosion.		X	X
Clean complete game device.			X
Check chain links for abrasion (1/3 maximum permissible).		X	X
Check ground clearance.		X	X

Work documentation

Date	Kind of work	Name, Sign