220605

Wall Bouldering Cube S

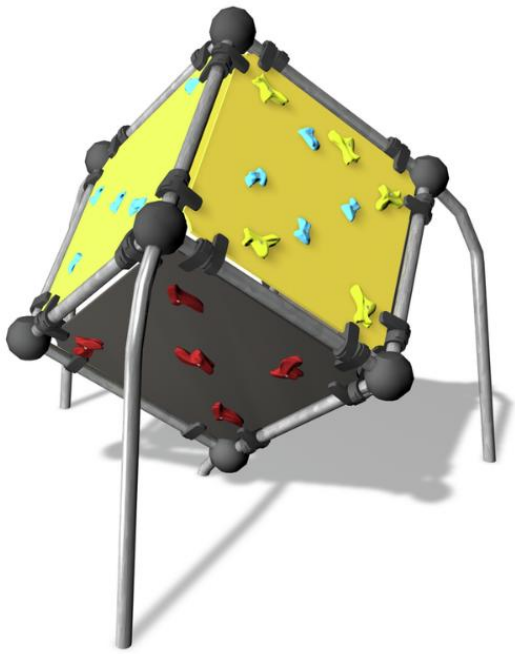

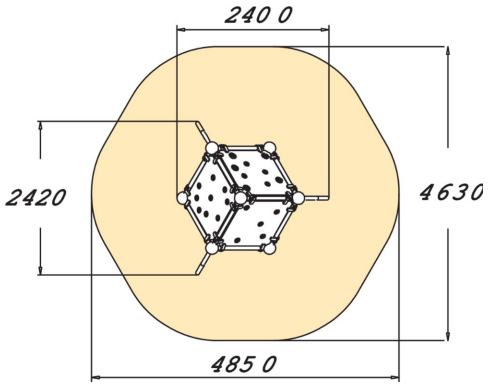

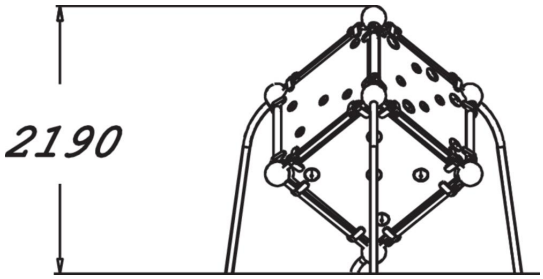

User age	5+
Number of users	3
Product length, mm	2400
Product width, mm	2420
Product height, mm	2190
Impact area, m²	17.8
Falling space, m²	17.8
Height required, mm	3990
Max. free fall height, mm	2190
Safety info	EN 1176-1 TÜV
Installation time (for 1), H	7
Foundation options	Deep mounting Surface mounting
Colour of walls and HPL	

LAPPSET GROUP LTD
P.O. Box 8146, 96101 Rovaniemi, Finland
lappset@lappset.com | www.lappset.com

© Lappset Group Ltd. All Rights Reserved.